SANDBAG AND SANDBAG BARRIER

Installation:

Individual sandbags to be filled as shown. End of sandbag are to be folded over to close, not stiched or sown. Sizes shall are standard Army detail.

Sandbags can be filled with sand, gravel, or other non–toxic or degradable sediments.

Sandbag material to be a non–woven geotextile fabric which meets Fort Jackson specifications.

Sandbag barrier should have a width to height ratio of 3:1. Barrier should be pyramid shaped with no vertical walls.

Bottom level of barrier should be placed in trench with a depth of 120 – 250 mm.

Ends of sandbags to be butted tightly together within barrier.

If waterproofing is desired, run water proofing strip through barrier as shown.

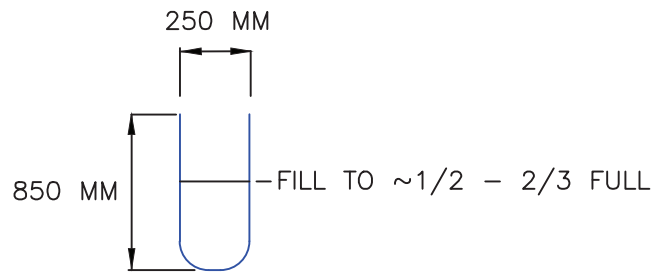

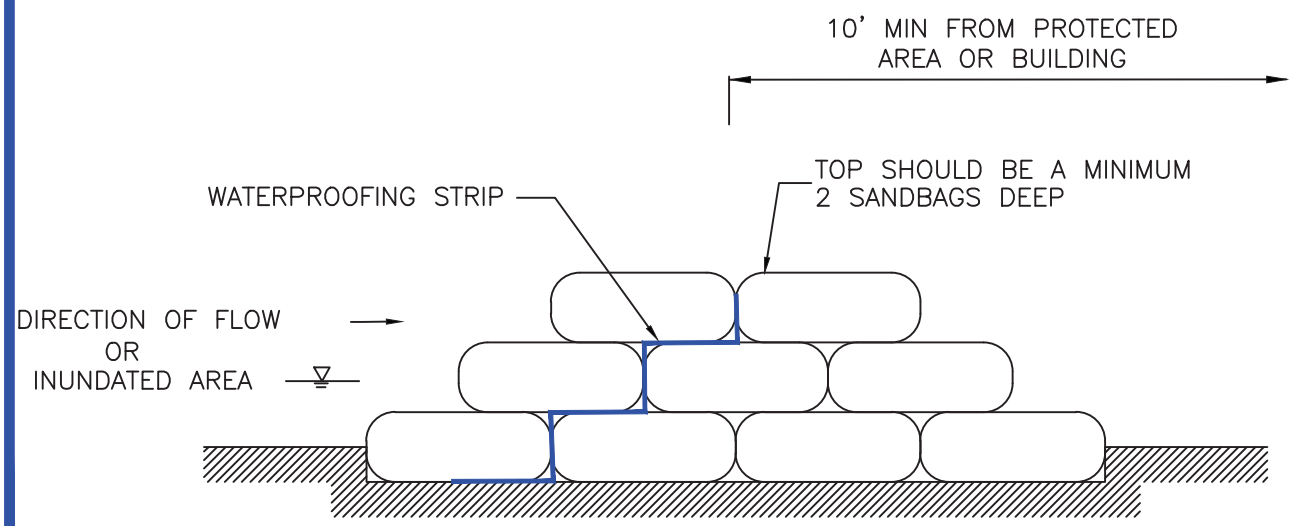

Fort Jackson
Land Disturbance Handbook

SANDBAG DETAILS

STANDARD DRAWING NO. EC–18 Page 1 of 1

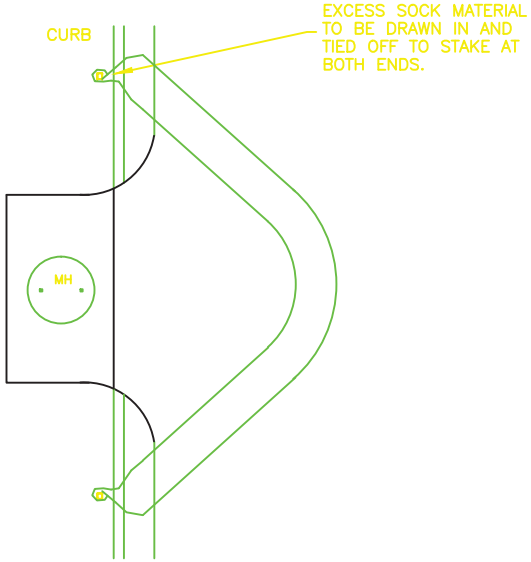

CURB INLET

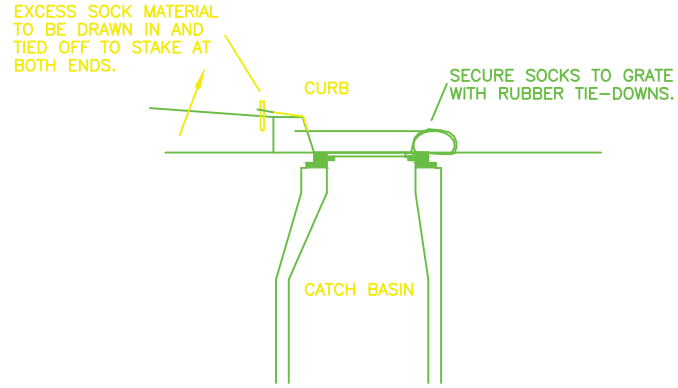

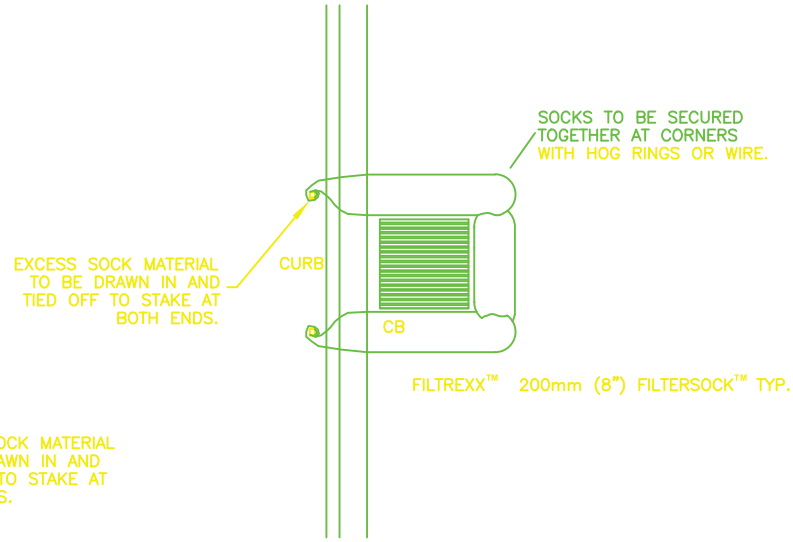

CATCH BASIN OPTION "B"

FOR USE IN TIGHTER AREAS, NARROW ROADS ETC.

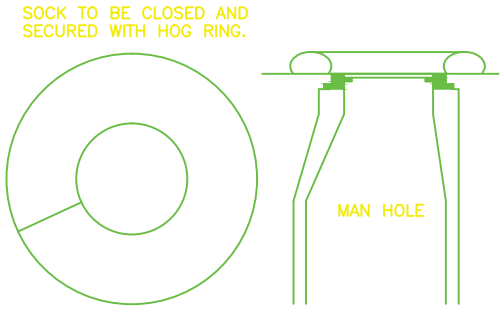

MANHOLE

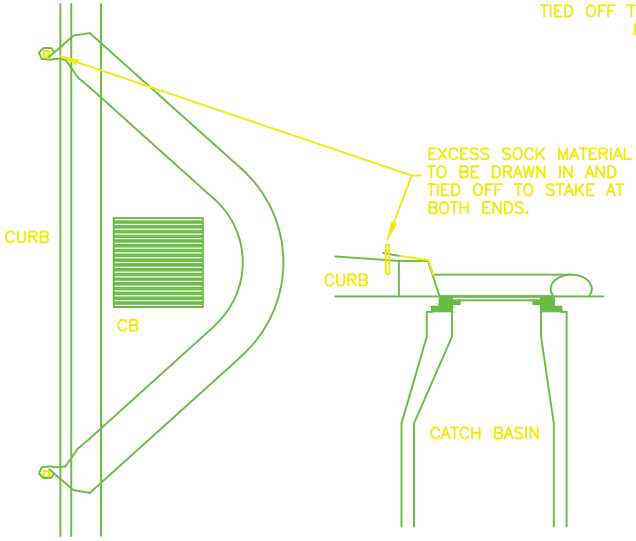

CATCH BASIN OPTION "A"

Fort Jackson
Land Disturbance Handbook

SOCK-TYPE INLET PROTECTION

STANDARD DRAWING NO. EC-19 Page 1 of 2

SOCK INLET PROTECTION

When and Where to Use It

Use as temporary protection during construction of any curb, grate, or yard inlets, manholes, or catch basins

Installation:

Socks should be placed around inlet to prevent sediment from entering storm drain system.

Socks are filled with various materials can vary depending on intended use. Engineer should specify this material or sock manufacturer specification should be used.

Sock should be anchored as specified by manufacturer.

If vegetation is to be integrated into sock, it should be filled with manufacturer approved compost material.

Inspection and Maintenance:

Regular inspections must be conducted a minimum of once every calendar week until final stabilization is achieved. Inspections are recommended within 24hrs after each rainfall event that produces ½ inch or more precipitation.

Inspect for sediment and debris accumulation. Inspect edges for erosion and repair promptly as required.

Sediment should be removed when it reaches 1/3 the original sock height.

All protection devices should be removed from site within 30 days after construction activities have ceased.

SOCK OPTION:

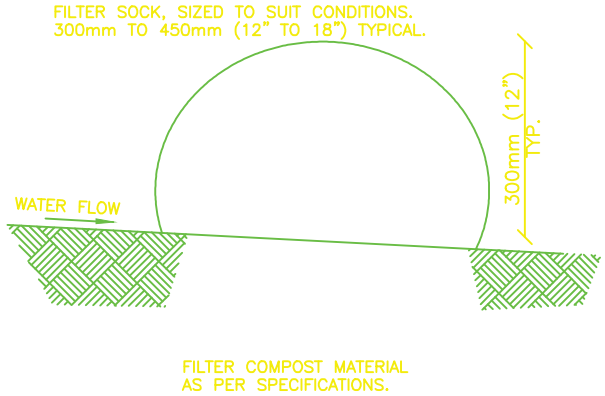

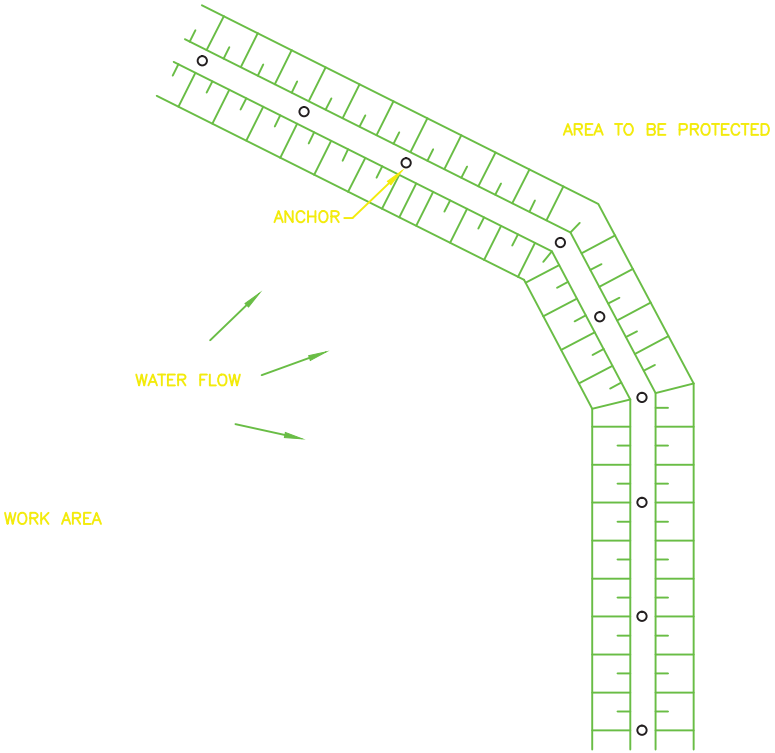

SOCK FENCE

When and Where to Use It

Sock fences are considered equivalent to silt fences and can therefore be used any place or situation where silt fences would be used.

Installation:

Sock fences should be placed on level contours to assist in dissipating sheet flow rather than concentrated flow. The end of the fence should pointing upslope.

Sock fences should be placed a minimum of 5 feet from the toe of slopes.

Sock fence should be anchored as specified by manufacturer.

If vegetation is to be integrated into fence, sock should be filled with manufacturer approved compost material.

Inspection and Maintenance:

Regular inspections must be conducted a minimum of once every calendar week until final stabilization is achieved. Inspections are recommended within 24hrs after each rainfall event that produces ½ inch or more precipitation.

Inspect for sediment and debris accumulation. Inspect edges for erosion and repair promptly as required.

Sediment should be removed when it reaches 1/3 the original sock height.

All non–permanent fences should be removed from site within 30 days after construction activities have ceased.

Fort Jackson
Land Disturbance Handbook

SOCK FENCE

STANDARD DRAWING NO. EC–20 Page 1 of 1

GEOTEXTILE FILTER FABRIC

When and Where to Use It

Geotextile fabric should be used a specificed in details or as directed by the Engineer or Fort Jackson personnel.

Strength Specifications:

	Class 1[1] Fabric Protected	Class 2 Fabric Unprotected
Grab Strength ASTM D 4632	90 lbs.	200 lbs.
Seam Strength[2] ASTM D 4632	80 lbs.	180 lbs.
Puncture Strength ASTM D 4833	40 lbs.	80 lbs.
Burst Strength ASTM D 3786	140 psi.	250 psi.
Trapezoid Tear Strength ASTM D 4533	40 lbs.	80 lbs.
Elongation at Failure ASTM D 4632	15% minimum	15% minimum
Ultraviolet Degradation at 500 Hours ASTM D 4355	50% Strength Retained	50% Strength Retained

1 Fabric is said to be protected when cushioned from rock placement by a sufficient layer of sand or gravel at least 6 inches thick or by zero height placement. All other conditions are said to be unprotected.

2 Values apply to both field and manufactured seams. Seams should be sewn upwards for inspection.

Piping Resistance (Soil Retention) & Permittivity Requirements:

	AOS (ASTM D 4751)	Permittivity (ASTM D 4491)
Type A	=No. 30 Std Sieve	=0.7 sec−1
Type B	=No. 40 Std Sieve	=0.2 sec−1
Type C	=No. 60 Std Sieve	=0.1 sec−1
Type D	AOS and fabric permittivity requirements will be based on site specific design and will be indicated in the special provisions of the proposal.	

Type A fabric will generally be specified for soils with less than 15% particles by weight passing the No. 200 sieve.

Type B fabric will generally be specified for soils with 15% to 50% particles by weight passing the No. 200 sieve.

Type C fabric will generally be specified for soils with more than 50% particles by weight passing the No. 200 sieve.

Type D fabric will generally be specified for Critical/Severe Applications

Fort Jackson soils will normally require either Type A or B filter fabrics. Some soils on post may require Type C filter fabric depending on depth of land disturbance and location.

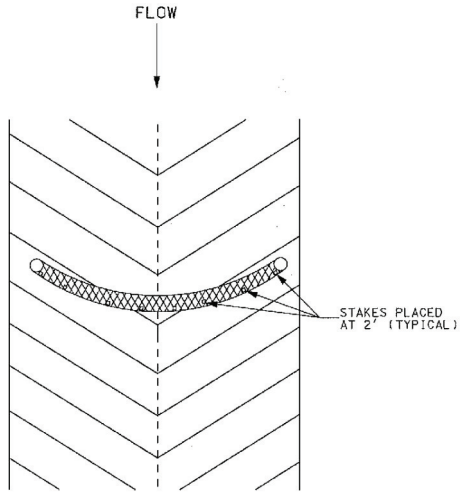

TOP VIEW
OF DITCH

SEE NOTES ON PAGE 2 OF 2

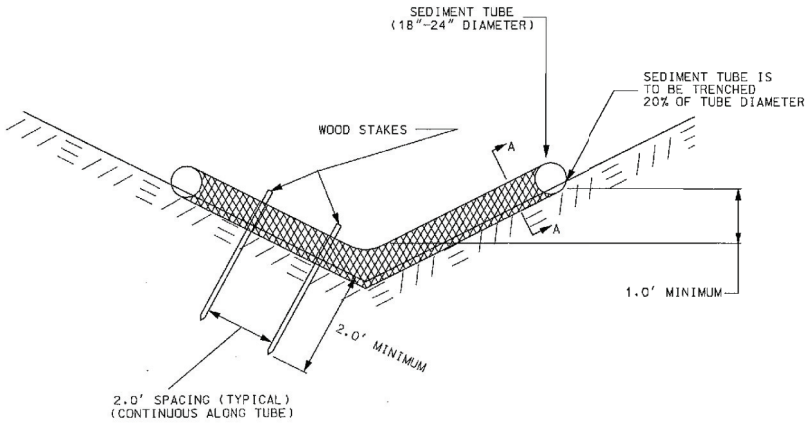

END VIEW
OF DITCH

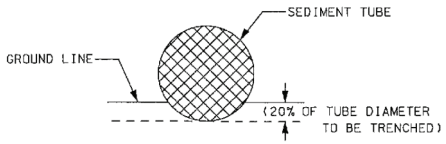

SECTION A-A

Drawing is Not to Scale
Source: SCDOT 815-205-00

Fort Jackson
Land Disturbance Handbook

SEDMENT TUBE CHECK

STANDARD DRAWING NO. EC-22 Page 1 of 1

1. SEDIMENT TUBE SHALL COMPLY WITH THE REQUIREMENTS OF SECTION 815 OF THE SCDOT STANDARD SPECIFICATION FOR HIGHWAY CONSTRUCTION (LATEST EDITION), AND MUST BE LISTED ON SCDOT QUALIFIED PRODUCT LIST NUMBER 57. SEDIMENT TUBES MUST MEET THE CRITERIA OUTLINED IN THE SUPPLEMENTAL SPECIFICATIONS BEFORE BEING LISTED ON QPL AND BE FREE FROM DEFECTS OR TRANSPORTATION DAMAGE.

2. PROPER SITE PREPARATION IS ESSENTIAL TO ENSURE SEDIMENT TUBES ARE IN COMPLETE CONTACT WITH UNDERLYING SOIL. SEDIMENT TUBES ARE TO BE 18–24 INCHES IN DIAMETER AND ARE TO BE TRENCHED TO A DEPTH OF 20% OF TUBE DIAMETER.

3. SEDIMENT TUBE SHALL BE INSTALLED IMMEDIATELY AFTER GRADING AND CONSTRUCTION. SEDIMENT TUBE SHALL BE MAINTAINED DURING SUBGRADE AND BASE PREPERATION UNTIL BASE COURSE IS COMPLETE. SEDIMENT TUBES MAY BE TEMPORARILY MOVED DURING CONSTRUCTION.

4. SEDIMENT TUBES ARE TO BE INSTALLED PERPENDICULAR TO WATER FLOW AND EXTEND UP SIDE SLOPES A MINIMUM OF 1 FOOT ABOVE DESIGN FLOW DEPTH. SPACE TUBES ACCORDING TO THE FOLLOWING TABLE:

SLOPE	MAXIMUM SEDIMENT TUBE SPACING
LESS THAN 2%	150 FEET
2%	100 FEET
3%	75 FEET
4%	50 FEET
5%	40 FEET
6%	30 FEET
GREATER THAN 6%	25 FEET

5. THE SEDIMENT TUBE SHALL BE STAKED DOWN WITH 1 INCH BY 1 INCH WOOD STAKES OR 1.25 LBS PER LINEAR FT. STEEL POSTS EVERY 2 FEET ALONG ITS LENGTH. THE STAKES SHALL BE A MINIMUM OF 4 FEET IN LENGTH AND EMBEDDED A MINIMUM OF 2 FEET INTO THE GROUND LEAVING LESS THAN 1 FOOT OF THE STAKE ABOVE THE EXPOSED SEDIMENT TUBE. THE STAKES SHALL BE INTERTWINED WITH THE OUTER MESH ONLY AND SHALL BE ON THE DOWNSTREAM SIDE OF THE TUBE. REFER TO THE MANUFACTURER'S RECOMMENDATIONS FOR OTHER STAKING DETAILS.

6. SELECT PROPER LENGTH OF TUBE TO MINIMIZE THE NUMBER NEEDED TO SPAN THE WIDTH OF DRAINAGE AREA. ONE CONTINUOUS LENGTH IS PREFERRED COMPARED TO TWO OVERLAPPING TUBES. IF NECESSARY. SEDIMENT TUBES CAN BE LAPPED A MINIMUM OF 6 INCHES TO PREVENT PASSAGE OF FLOW AND SEDIMENT THROUGH FIELD JOINT.

7. INSTALL SEDIMENT TUBES FOR DITCH CHECKS OVER BARE SOIL, MULCHED AREAS, OR EROSION CONTROL BLANKETS. KEEP SEDIMENT TUBES FOR DITCH CHECKS IN PLACE UNTIL FULLY ESTABLISHED VEGETATION AND ROOT SYSTEMS HAVE COMPLETELY DEVELOPED AND CAN SURVIVE ON THEIR OWN.

8. INSPECT SEDIMENT TUBES AFTER INSTALLATION FOR GAPS UNDER THE SEDIMENT TUBES AND FOR GAPS BETWEEN THE JOINTS OF ADJACENT ENDS OF SEDIMENT TUBES. INSPECT SEDIMENT TUBES EVERY CALENDAR WEEK AND INSPECTIONS ARE RECOMMENDED AFTER EACH RAINFALL EVENT THAT PRODUCES ½ INCH OR GREATER PRECIPITATION UNTIL FINAL STABILIZATION IS ACHIEVED. REPAIR ALL RILLS, GULLIES, AND UNDERCUTTING NEAR SEDIMENT TUBES. REMOVE ALL SEDIMENT DEPOSITS THAT IMPAIR THE FILTRATION CAPABILITY OF SEDIMENT TUBES WHEN THE SEDIMENT REACHES 1/3 THE HEIGHT OF THE EXPOSED SEDIMENT TUBE.

9. REMOVE AND/OR REPLACE INSTALLED SEDIMENT TUBES AS REQUIRED TO ADAPT TO CHANGING CONSTRUCTION SITE CONDITIONS. REMOVE SEDIMENT TUBES WHEN THE FUNCTIONAL LONGEVITY IS EXCEEDED AS DETERMINED BY THE ENGINEER, INSPECTOR, OR MANUFACTURER'S REPRESENTATIVE. GATHER SEDIMENT TUBES AND DISPOSE OF THEM IN REGULAR MEANS AS NON–HAZARDOUS, INERT MATERIAL.

10. PRIOR TO FINAL STABILIZATION. BACKFILL ALL TRENCHES, DEPRESSIONS, AND OTHER GROUND DISTURBANCES CAUSED BY THE REMOVAL OF SEDIMENT TUBES.

Source: SCDOT 815-205-00

Fort Jackson
Land Disturbance Handbook

SEDIMENT TUBE CHECK

STANDARD DRAWING NO. EC–22 Page 2 of 2

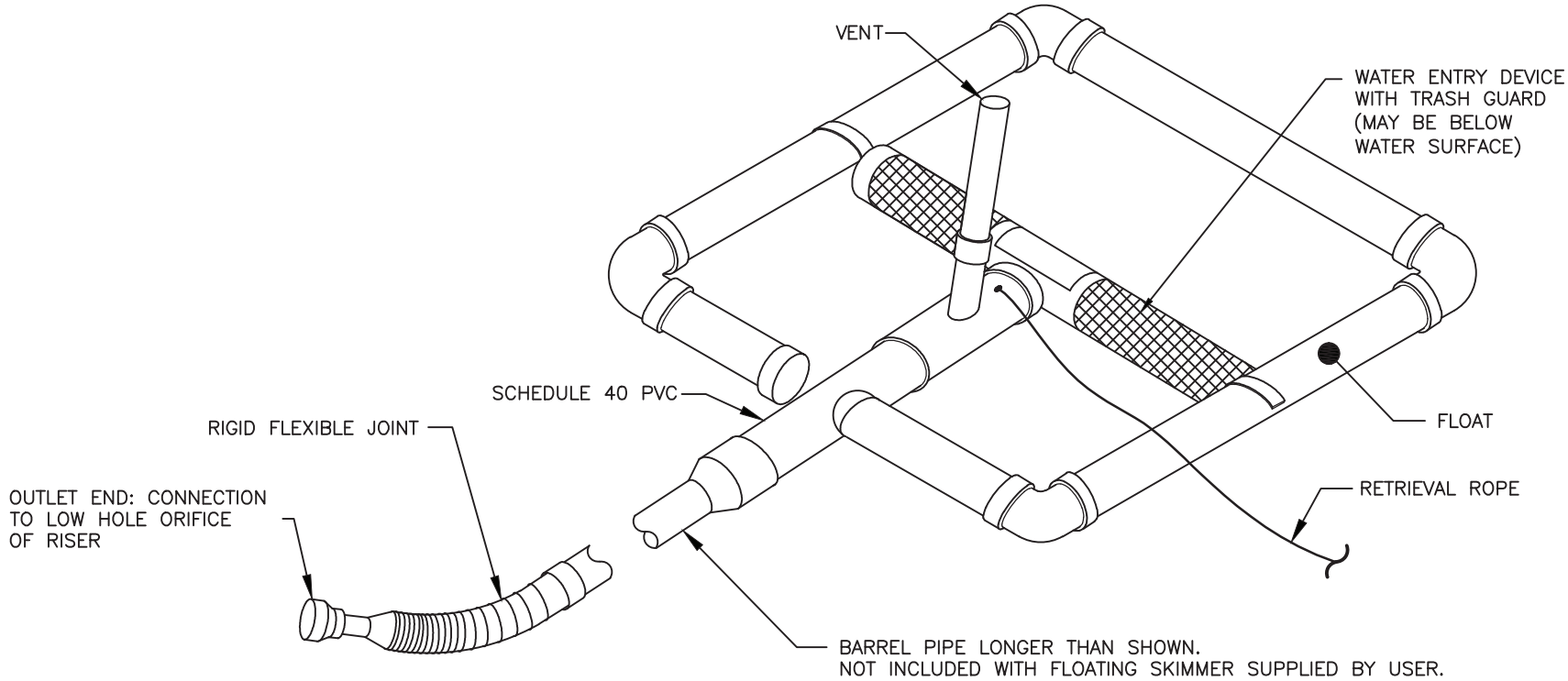

FLOATING SKIMMER DETAIL (NTS)

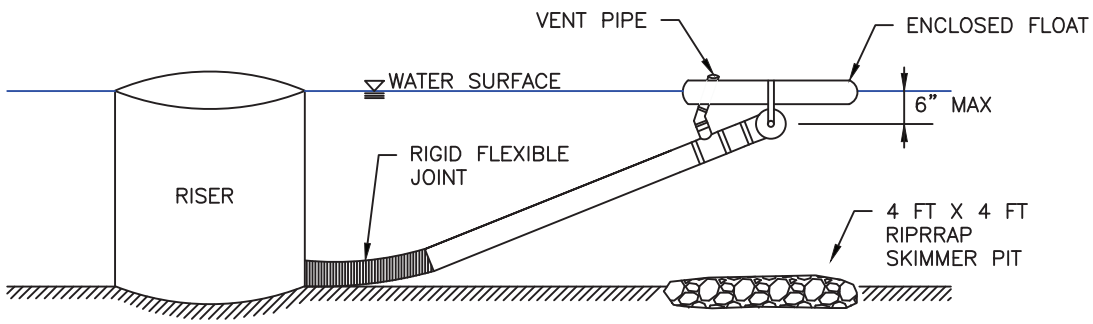

FLOATING SKIMMER/RISER PROFILE VIEW

Fort Jackson
Land Disturbance Handbook

FLOATING SKIMMER

STANDARD DRAWING NO. EC–23 Page 1 of 2

FLOATING SKIMMER

When and Where to Use It

Floating Skimmers float at the water surface of a sediment basin or sediment trap and dewater from the water surface where sediment concentrations are at a minimum in the water column. Floating Skimmers release a low rate of flow draining the basin slowly at a constant rate. The inlet of the skimmer device is sized according to the basin volume and designed to drain the basin in a fixed amount of time

Installation:

- Manufactured floating skimmers should be installed in accordance with the Manufacturer's written installation instructions. The floating skimmer should be positioned over a skimmer pit. Ensure the Floating Skimmer is assembled level over the skimmer pit. A flexible joint is constructed with a section of Schedule 40 flexible PVC pipe at the connection with the riser. The flexible joint and flexible PVC pipe allows the skimmer to be retrieved from the bank using the maintenance rope.
- The maintenance rope should be floatable and is used to remove trash and debris which accumulate on the outside of the trash guard. One end of the maintenance rope is tied around a secure portion of the floating skimmer and the other end is tied to a metal stake driven into the basin embankment near the riser. Ensure the rope attachment to the metal stake is higher than the design water surface level. Ensure a good knot is established that will not become loose. Ensure there is enough slack in the rope to allow the floating skimmer to float up and down through its full range of motion so that it settles into the skimmer pit after the basin drains.

Floating skimmers should be removed at the end of the construction phase of the project. If the Basin is to be converted to a permanent water quantity or quality basin, ensure the orifice where the floating skimmer was attached to the basin riser is covered, adjusted, or modified according to the Project Plans and Specifications.

Inspection and Maintenance:

- Floating skimmers which sink or completely suspend under the water surface are not to be accepted. A portion of the floating skimmer must be visible above the water surface at all times. Vent holes are required on all skimmers to ensure the device drains by gravity flow. Inlets or orifices to the skimmer may be submerged no greater than 6 inches below the water surface.
- Inspect the floating skimmer for any structural damage, clogging, or excessive sediment accumulation.
- If the skimmer becomes stuck in the mud at the bottom of the basin, it must be freed to allow for normal operation. This can typically be done by use of the maintenance rope.
- Sediment deposits should be removed when the floating skimmer cannot settle low enough to completely drain the entire basin.
- While draining the basin, the trash guard of the floating skimmer may clog with debris. Typically, a few jerks on the maintenance rope will clear the floating skimmer of debris and restore flow. If jerking the maintenance rope does not work, the skimmer should be pulled to the embankment with the maintenance rope and all debris manually cleaned from the trash guard. An internal clog or blockage may require the device to be disassembled.

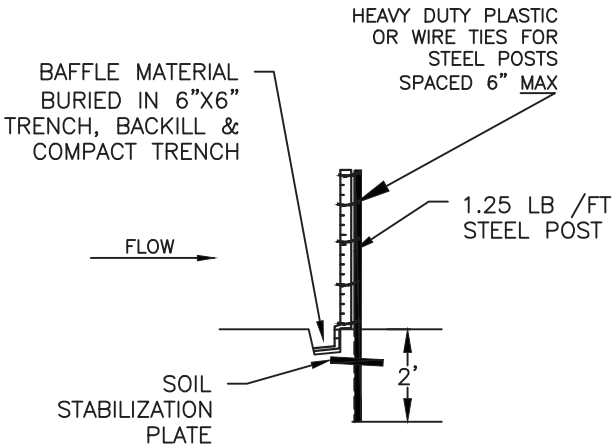

SECTION VIEW AT OPENING

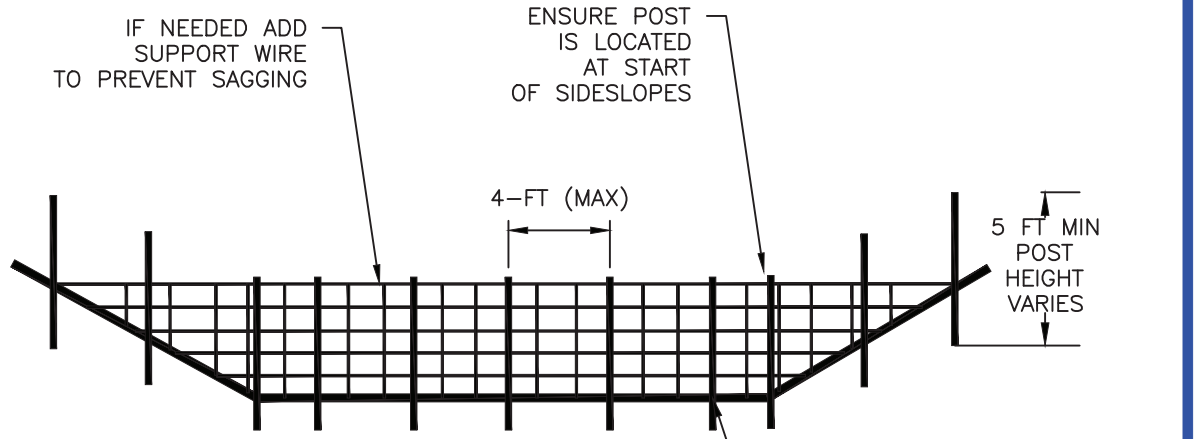

CROSS SECTION VIEW

USE 12" ANCHORS (STAKES, PINS, STAPLES) SPACED AT 1' INTERVALS TO SECURE POROUS BAFFLE TO BASIN BOTTOM OR TRENCH & BACKFILL.

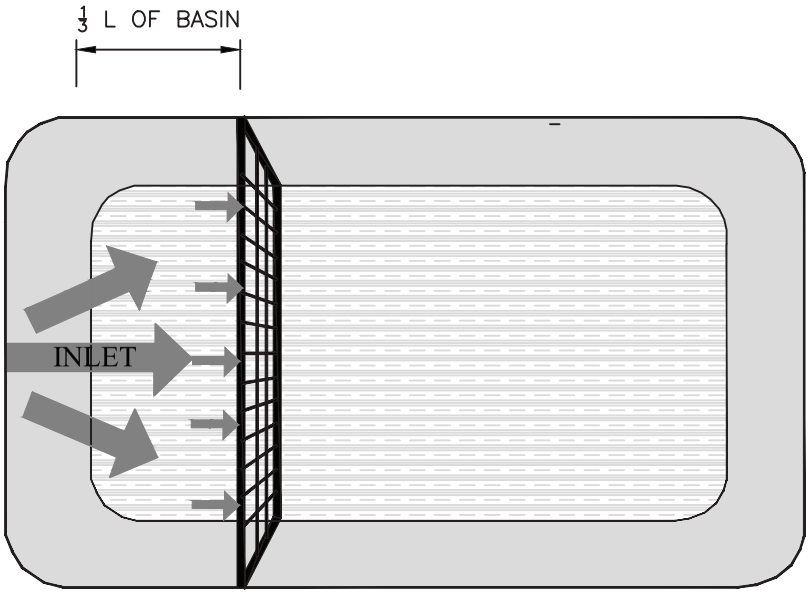

PLAN VIEW

NOTES:

- SECURE BAFFLE MATERIAL AT THE BOTTOM AND SIDES USING STAPLES OR BY TRENCHING.
- MOST SEDIMENT ACCUMULATES IN THE 1ST BAY, AND SHOULD BE READILY ACCESSIBLE FOR MAINTENANCE.
- PROVIDE A ROW OF POROUS BAFFLES PLACED AT 1/3 BASIN LENGTH
- WOOD POSTS ARE NOT ALLOWED.
- ATTACH POROUS MATERIAL ON UPSTREAM SIDE OF STEEL POST WITH HEAVY DUTY PLASTIC OR WIRE TIES EVENLY SPACED TO PREVENT SAGGING OR TEARING OF BAFFLE. MATERIAL.
- SPACE TIES AT 6" MAX. INTERVALS

Fort Jackson
Land Disturbance Handbook

POROUS BAFFLE

STANDARD DRAWING NO. EC-24 Page 1 of 2

POROUS BAFFLES

When and Where to Use It

Porous baffle systems are used inside temporary sediment detainment structures such as sediment traps and sediment basins to reduce the velocity and turbulence of water flowing through the structure by spreading the flow across the entire width of the basin. The reduction of turbulent flow facilitates the settling of sediment and improves sediment retention efficiency for sediment detainment structures.

Installation:

- Porous baffle systems should be constructed inside sediment traps and sediment. Ensure porous baffles are installed perpendicular to flow within the sediment control structure. Porous baffle systems should be installed across the entire width of the sediment basin/trap.
- Porous baffle systems should not be installed until the sediment trap or basin is excavated and graded with a level bottom surface.
- Steel posts should be installed on maximum 4–foot centers across the structure bottom and up the embankments. The steel posts are driven to a minimum depth of 2 feet or to the maximum extent practicable.
- The porous baffle system material should be attached to the upstream side of the steel posts using heavy–duty plastic ties, or wire ties that are evenly spaced and placed in a manner to prevent sagging or tearing of the fabric. In all cases, ties should be spaced at maximum 6–inch intervals.
- 12–inch anchors (stakes, pins, or staples) spaced on 1–foot intervals should be used to secure the porous baffle system material to the bottom and up the sediment basin/trap embankments. An alternative installation method is trenching the porous baffle material into the basin bottom by excavating and backfilling a 6–inch deep by 6–inch wide trench.
- In cases where the porous baffle material sags between support posts, a 9–gauge steel wire or rope support should be woven across the top of the porous baffle system to prevent sagging. A steel post should be driven on each side of the sediment trapping structure and one side of the support wire attached to the post.
- When joints are necessary, the materials are wrapped together at a support steel post with both ends fastened to the post and with a 12–inch minimum overlap.
- Silt fence should not be used as material for porous baffle systems.

Inspection and Maintenance:

- Inspect porous baffle system every calendar week and inspections are recommended within 24 hours after each rainfall event that produces ½ inch or more of precipitation until final stabilization is achieved. Check for sediment buildup and structure integrity. Sediment should be removed when it reaches 50% of the height of the first baffle row.
- Check where runoff has eroded a channel beneath the baffle, or where the baffle has sagged or collapsed. Ensure that the baffle material stays securely installed along the basin sides and in the bottom. Ensure the baffle system does not sag across the top of the baffle system. The baffle material should be replaced if torn or if evidence of deterioration is noted.
- Porous baffles should be removed and replaced whenever it has deteriorated to the extent that it reduces the effectiveness of the porous baffle system. Access should be maintained to the porous baffles and replaced promptly if the baffle collapses, tears, decomposes, or becomes ineffective. Sediment deposits should be removed when they reach ½ the baffle height in the first baffle cell.

EXCAVATED PIT CONCRETE WASHOUT

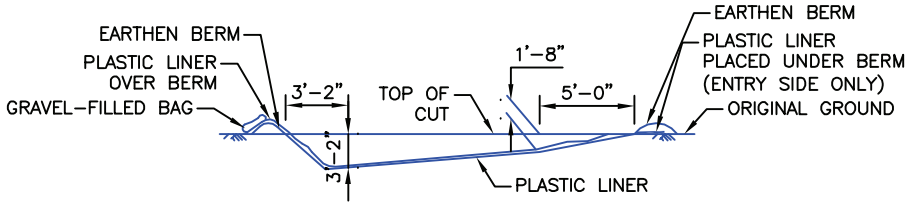

SECTION B-B

NOT TO SCALE

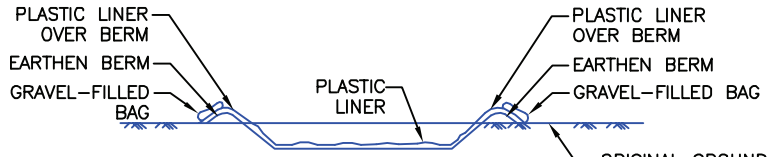

SECTION A-A

NOT TO SCALE

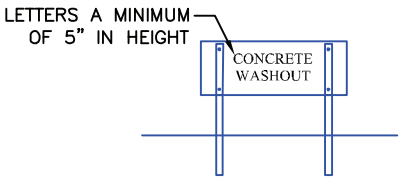

CONCRETE WASHOUT SIGN DETAIL

NOT TO SCALE

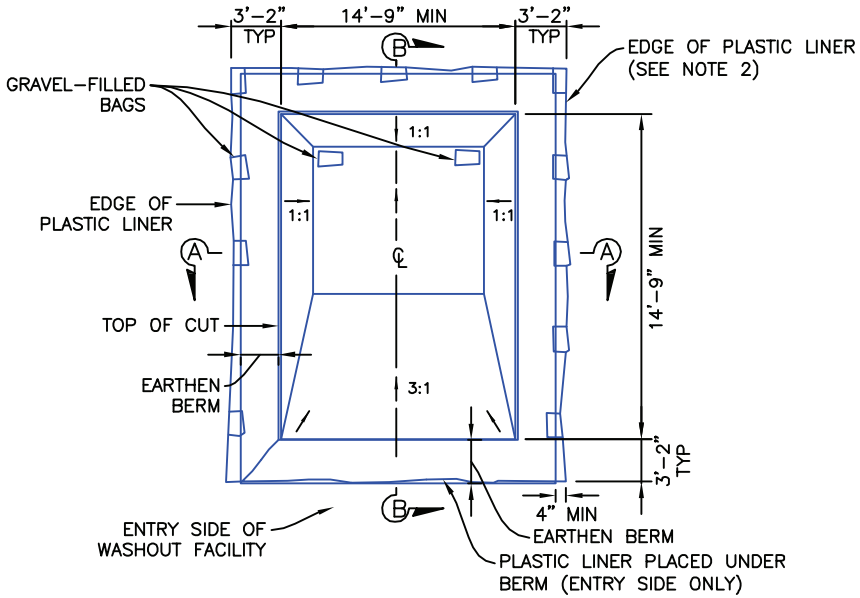

TEMPORARY CONCRETE WASHOUT

NOT TO SCALE

NOTES:

1. ACTUAL LAYOUT DETERMINED IN FIELD.
2. INSTALL CONCRETE WASHOUT SIGN (24"X24", MINIMUM) WITHIN 30' OF THE TEMPORARY CONCRETE WASHOUT FACILITY.
3. TEMPORARY WASHOUT AREA MUST BE AT LEAST 50' FROM A STORM DRAIN, CREEK BANK OR PERIMETER CONTROL.
4. CLEAN OUT CONCRETE WASHOUT AREA WHEN 50% FULL.

Fort Jackson
Land Disturbance Handbook

CONCRETE WASHOUT

STANDARD DRAWING NO. EC–25 Page 1 of 2

CONCRETE WASHOUT

Installation:

- Temporary concrete washout facilities should be located a minimum of 50 feet from storm drain inlets, open drainage facilities, waterbodies, creek banks, or perimeter control unless determined infeasible by the Design Engineer. Each facility should be located away from construction traffic or access areas to prevent disturbance or tracking.
- A sign should be installed within 30 feet each washout facility to inform concrete equipment operators to utilize the proper facilities.
- Temporary concrete washout facilities should be constructed above grade or below grade at the option of the Contractor. Temporary concrete washout facilities should be constructed and maintained in sufficient quantity and size to contain all liquid and concrete waste generated by washout operations.
- Temporary washout facilities should have a temporary pit or bermed area of sufficient volume to completely contain all liquid and waste concrete materials generated during washout procedures.
- Washout of concrete mixer trucks should be performed in designated areas only.
- Concrete should be washed only from mixer truck chutes into an approved concrete washout facility. Washout may be collected in an impermeable bag for disposal.
- Concrete washout from concrete pumper bins can be washed into concrete pumper trucks and discharged into designated washout area or properly disposed offsite.
- Once concrete wastes are washed into the designated area and allowed to harden, the concrete should be broken up, removed, and disposed.

Inspection and Maintenance:

- All temporary concrete washout facilities should be cleaned out when they are 50% full.

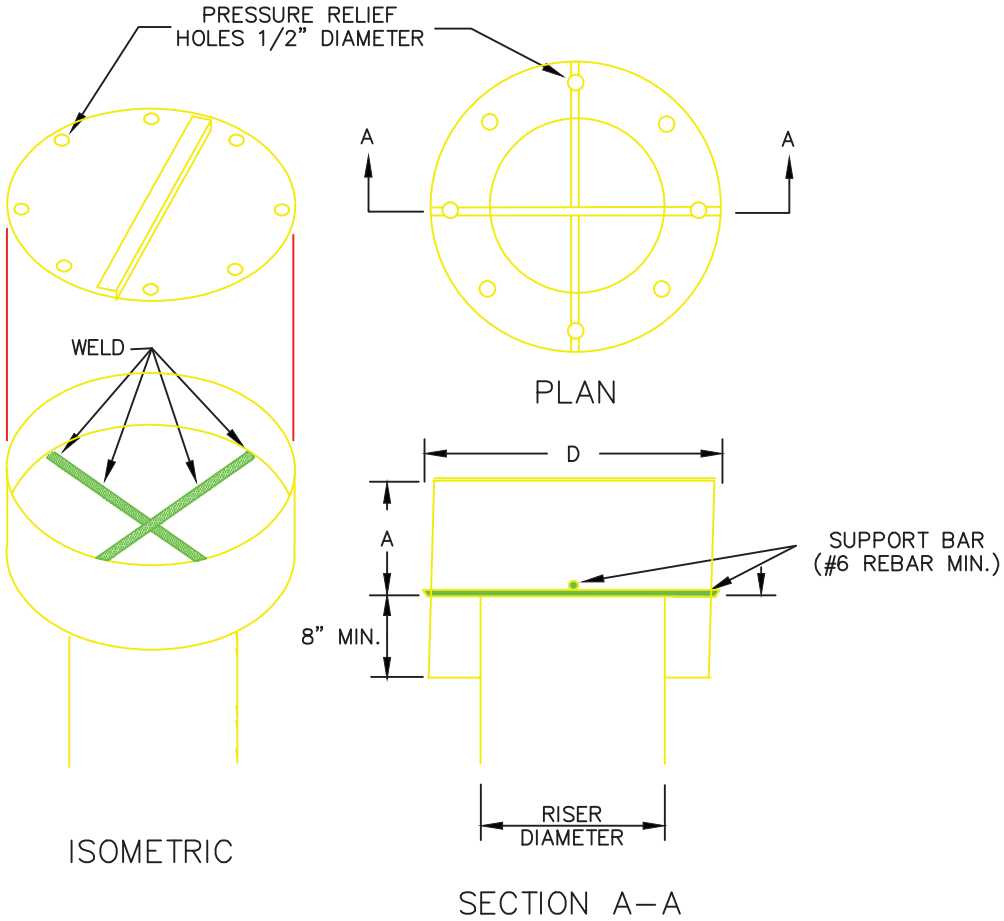

TOP STIFFENER (IF REQUIRED)
1S ___ x ___ x ___
ANGLE WELDED TO TOP AND ORIENTED PERPENDICULAR TO CORRUGATIONS.

TOP IS ___ GAGE CORRUGATED METAL OR 1/8" STEEL PLATE. PRESSURE RELIEF HOLES MAY BE OMITTED, IF ENDS OF CORRUGATIONS ARE LEFT FULLY OPENED WHEN THE TOP IS ATTACHED.

CYLINDER IS ___ GAGE CORRUGATED METAL PIPE OR FABRICATED FROM 1/8" STEEL PLATE.

NOTES:

1. THE CYLINDER MUST BE FIRMLY FASTENED TO THE TOP OF THE RISED.
2. SUPPORT BARS ARE WELDED TO THE TOP OF THE RISER OR ATTACHED BY STRAPS BOLTED TO TOP OF RISER.

Fort Jackson
Land Disturbance Handbook

ANTI–VORTEX OUTLET

STANDARD DRAWING NO. SD–01 Page 1 of 1

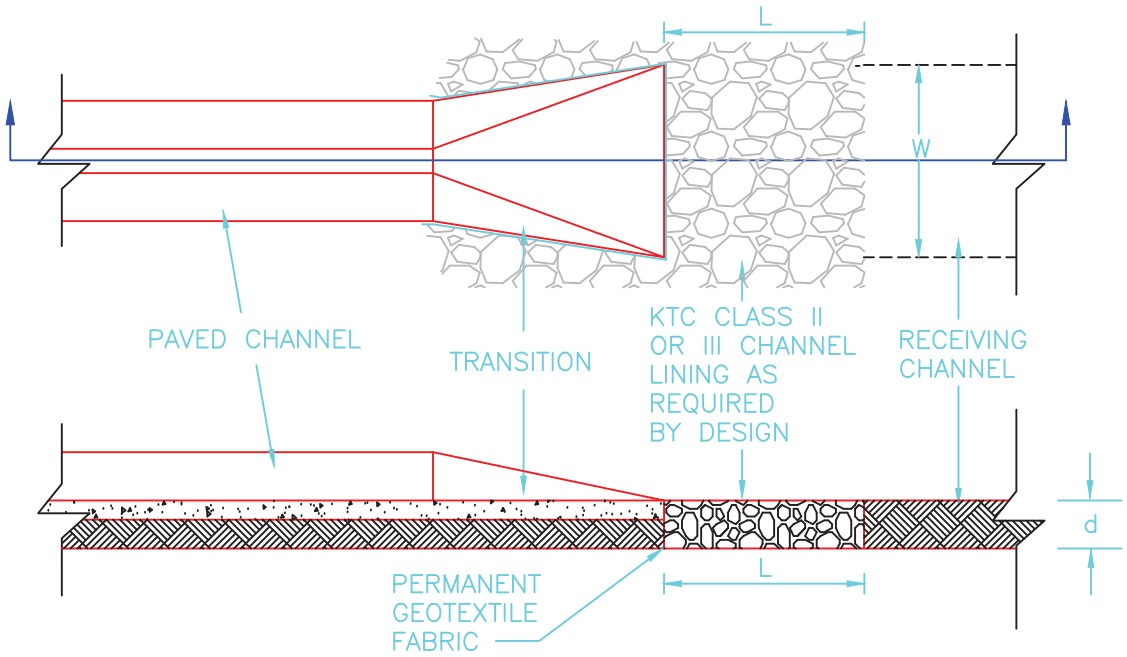

NOTES:

1. RIPRAP APRON REDUCES THE FLOW VELOCITY BELOW THE PERMISSIBLE VELOCITY OF THE NATURAL RECEIVING CHANNEL.

2. TRANSITION SIDE DIVERGENCE IS 1 IN 3F, WHERE

$$F = \text{FROUDE NUMBER} = \frac{V}{\sqrt{gd}}, \text{ WHERE}$$

V = VELOCITY AT THE BEGINNING OF THE TRANSITION
d = DEPTH OF FLOW AT THE BEGINNING OF THE TRANSITION
g = 32.2 ft./sec.^{2}

Fort Jackson
Land Disturbance Handbook

PAVED/CHANNEL OUTLET

STANDARD DRAWING NO. SD-02 Page 1 of 2

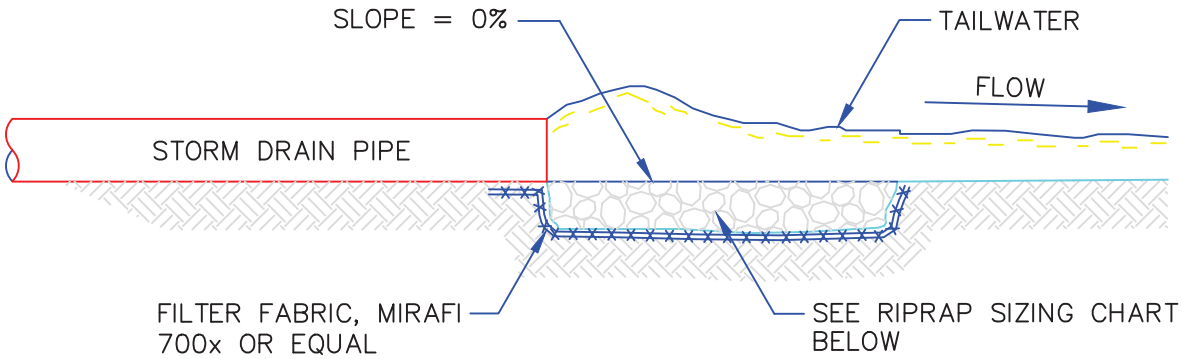

SECTION

RIP–RAP SIZING	
PIPE DIA. (IN.)	D50 (IN.)
12	6
15	6
18	6
24	9
30	9
36	9
42	12
48	12

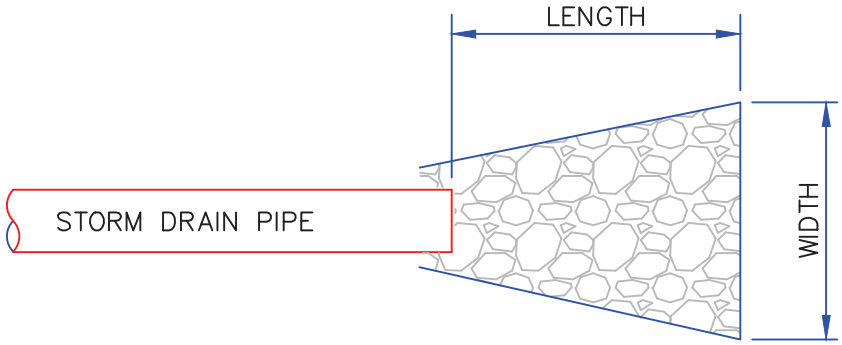

PLAN

RIP–RAP SCHEDULE		
PIPE DIA. (IN.)	LENGTH (FT.)	WIDTH (FT.)

(TO BE COMPLETED BEFORE SUBMITTAL)

RIP–RAP APRON

NOT TO SCALE

Fort Jackson
Land Disturbance Handbook

PIPE/CHANNEL OUTLET

STANDARD DRAWING NO. SD–02 Page 2 of 2

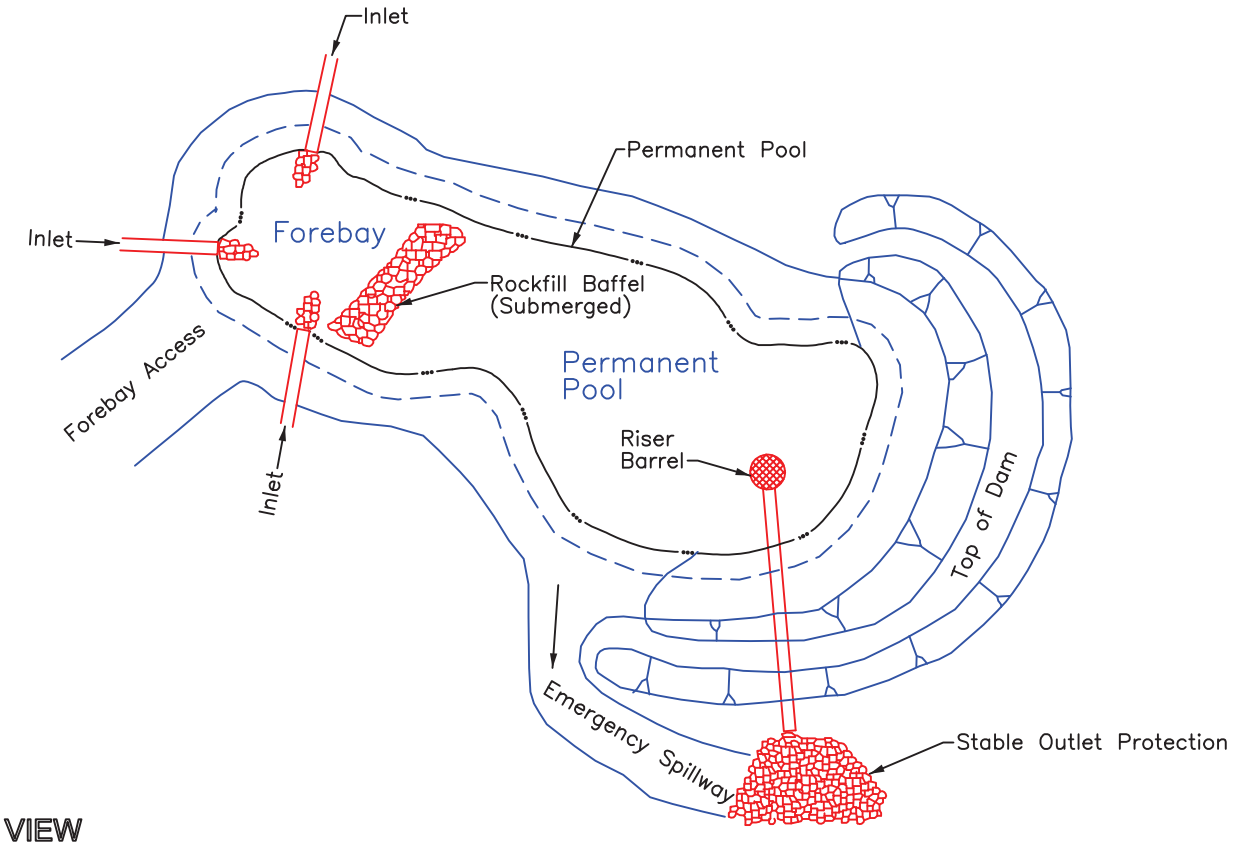

PLAN VIEW

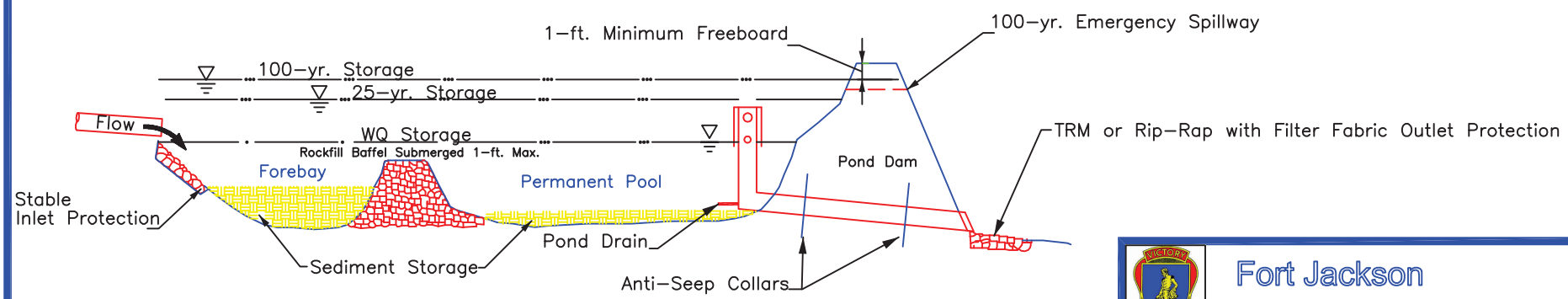

PROFILE

Fort Jackson
Land Disturbance Handbook

WET DETENTION POND

STANDARD DRAWING NO. WQ–01 Page 1 of 2

WET DETENTION POND

Wet ponds have a permanent (dead storage) pool of water equal to the water quality volume. Temporary storage (live storage) may be added above the permanent pool elevation for larger flows.

Installation:

A forebay shall be provided for all inlets to a wet water quality pond and shall be placed upstream of the main wet pond area. The forebay is separated from the larger wet detention pond area by barriers or baffles that may be constructed of earth, stones, riprap, gabions, or geotextiles. The top of the forebay barrier shall be a maximum of one (1)–foot below the normal pool elevation, and may extend above the elevation of the permanent pool.

The permanent pool shall be four (4) to six (6) feet in depth.

A low flow orifice shall be installed to slowly release the water quality volume. The low flow orifice shall be protected from clogging by designing appropriate trash guards. Acceptable trash guards include:

Hoods that extend at least 6–inches below the permanent pool water surface elevation.

Reverse flow pipes where the outlet structure inlet is located at least 6–inches below the permanent pool water surface elevation.

Trash boxes made of sturdy wire mesh.

Emergency spillways shall be installed to safely pass the post–development 100–year 24–hour storm event without overtopping any dam structures.

Inspection and Maintenance:

The side slopes of the pond shall be mowed monthly.

Since decomposing vegetation captured in the wetpond can release pollutants, especially nutrients, it may be necessary to harvest dead vegetation annually. Otherwise the decaying vegetation can export pollutants out of the pond and also can cause nuisance conditions to occur.

Debris shall be cleared from all inlet and outlet structures monthly.

All eroded or undercut areas shall be repaired as needed.

A sediment marker shall be placed in the forebay to determine when sediment removal is required.

Sediment accumulations in the main pond area shall be monitored and sediment shall be removed when the permanent pool volume has been significantly filled and/or the pond becomes eutrophic.

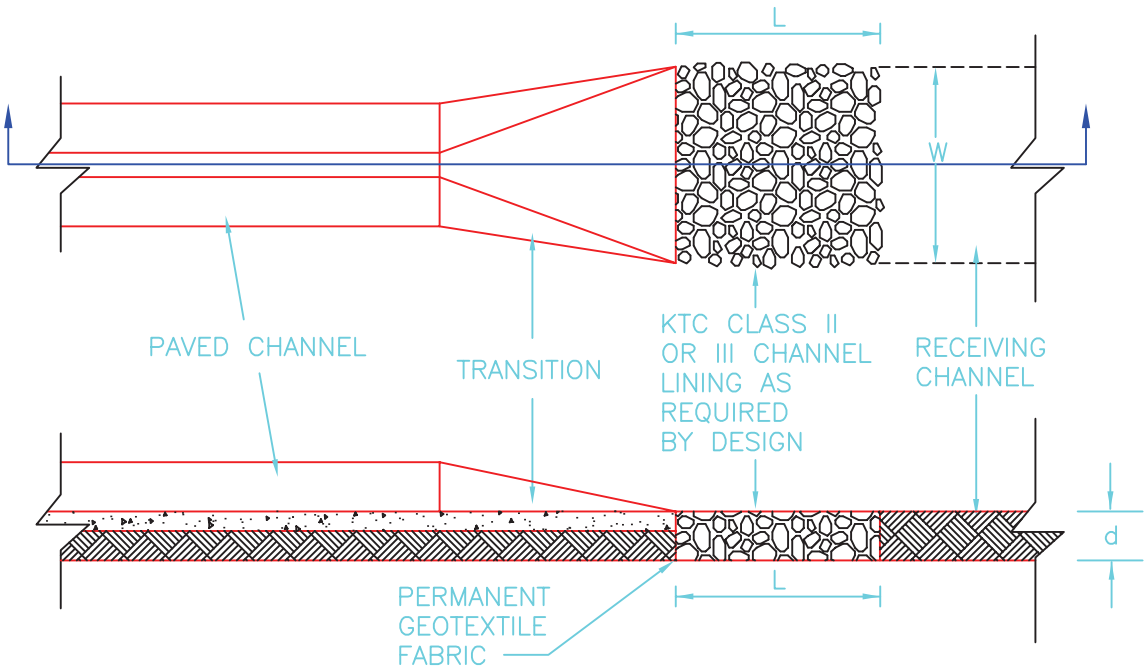

NOTES:

1. RIPRAP APRON REDUCES THE FLOW VELOCITY BELOW THE PERMISSIBLE VELOCITY OF THE NATURAL RECEIVING CHANNEL.

2. TRANSITION SIDE DIVERGENCE IS 1 IN 3F, WHERE

$$F = \text{FROUDE NUMBER} = \frac{V}{\sqrt{gd}}, \text{ WHERE}$$

V = VELOCITY AT THE BEGINNING OF THE TRANSITION
d = DEPTH OF FLOW AT THE BEGINNING OF THE TRANSITION
g = 32.2 ft./sec.^{2}

Fort Jackson
Land Disturbance Handbook

PAVED/CHANNEL OUTLET

STANDARD DRAWING NO. SD-02 Page 1 of 2

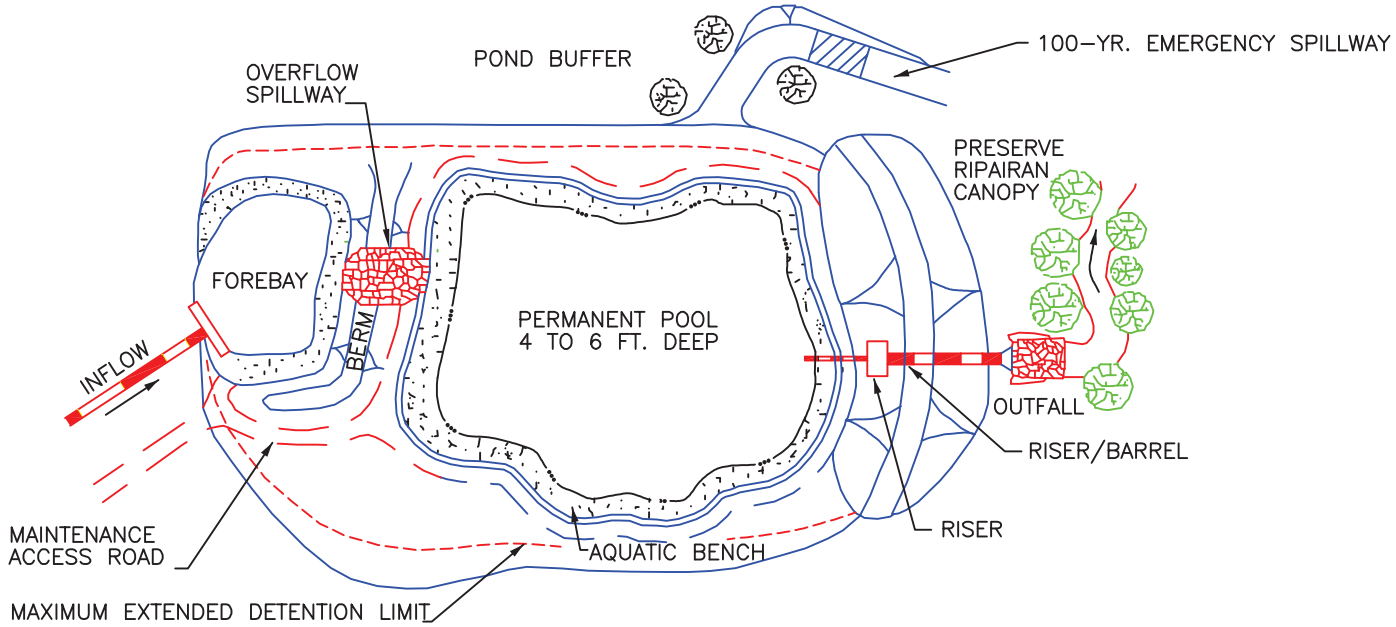

PLAN VIEW

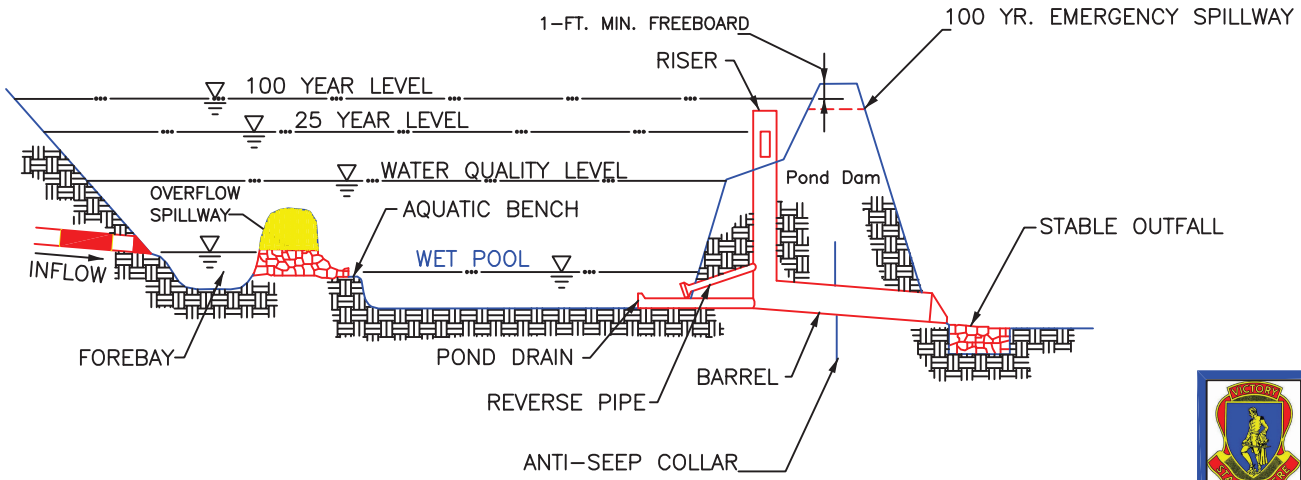

PROFILE

Fort Jackson
Land Disturbance Handbook

WET EXTENDED DETENTION POND

STANDARD DRAWING NO. WQ-02 Page 1 of 2

WET EXTENDED DETENTION POND

A wet extended pond is a wet pond where the water quality volume is split evenly between the permanent pool and extended detention storage provided above the permanent pool. During storm events, water is stored above permanent pool and released over 24–hours. The design has similar pollutant removal efficiencies as traditional wet ponds, but consumes less space.

Installation:

A forebay shall be provided for all inlets to a wet extended water quality pond and shall be placed upstream of the main wet pond area. The forebay is separated from the larger wet detention pond area by a berm that may be constructed of earth, stones, riprap, gabions, or geotextiles. The top of the forebay barrier shall be equal to the normal pool elevation, and may extend above the elevation of the permanent pool. A spillway shall be constructed to convey flow from the forebay to the wet detention pond area.

The permanent pool shall be four (4) to six (6) feet in depth.

A low flow orifice shall be installed to slowly release the water quality volume. The low flow orifice shall be protected from clogging by designing appropriate trash guards. Acceptable trash guards include:

Hoods that extend at least 6–inches below the permanent pool water surface elevation.

Reverse flow pipes where the outlet structure inlet is located at least 6–inches below the permanent pool water surface elevation.

Trash boxes made of sturdy wire mesh.

Emergency spillways shall be installed to pass the post–development 100–year 24–hour storm event without overtopping any structures.

Inspection and Maintenance:

The side slopes of the pond shall be mowed monthly.

Since decomposing vegetation captured in the wetpond can release pollutants, especially nutrients, it may be necessary to harvest dead vegetation annually. Otherwise the decaying vegetation can export pollutants out of the pond and also can cause nuisance conditions to occur.

Debris shall be cleared from all inlet and outlet structures monthly.

All eroded or undercut areas shall be repaired as needed.

A sediment marker shall be placed in the forebay to determine when sediment removal is required.

Sediment accumulations in the main pond area shall be monitored and sediment shall be removed when the permanent pool volume has been significantly filled and/or the pond becomes eutrophic.

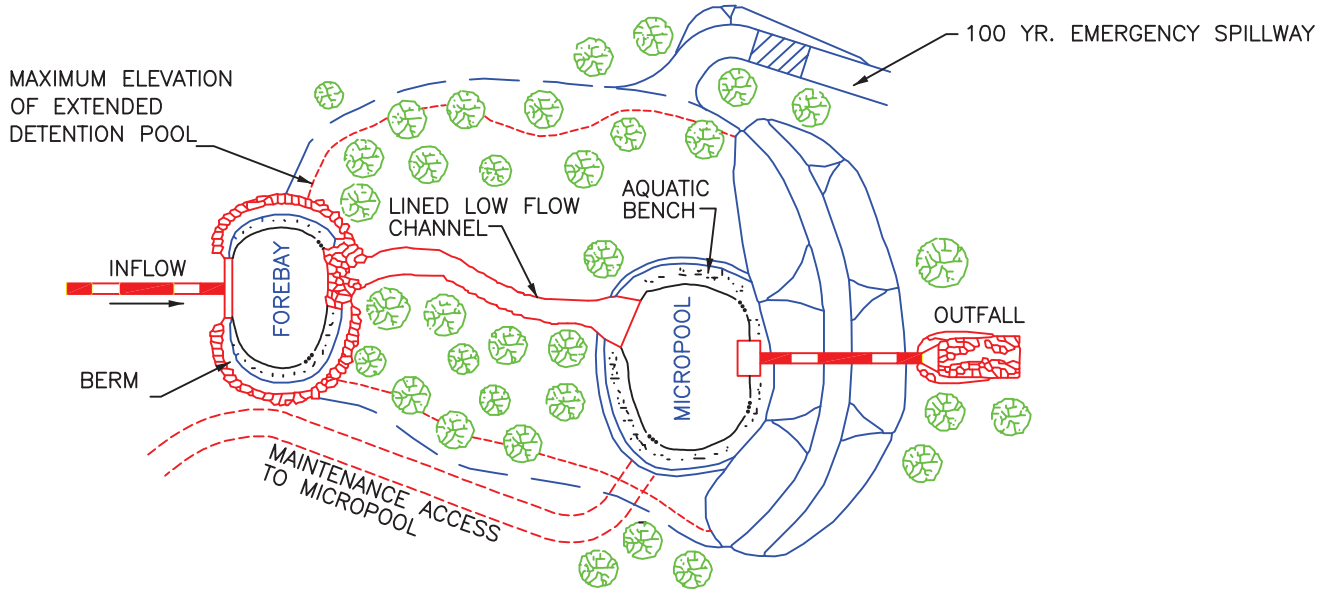

PLAN VIEW

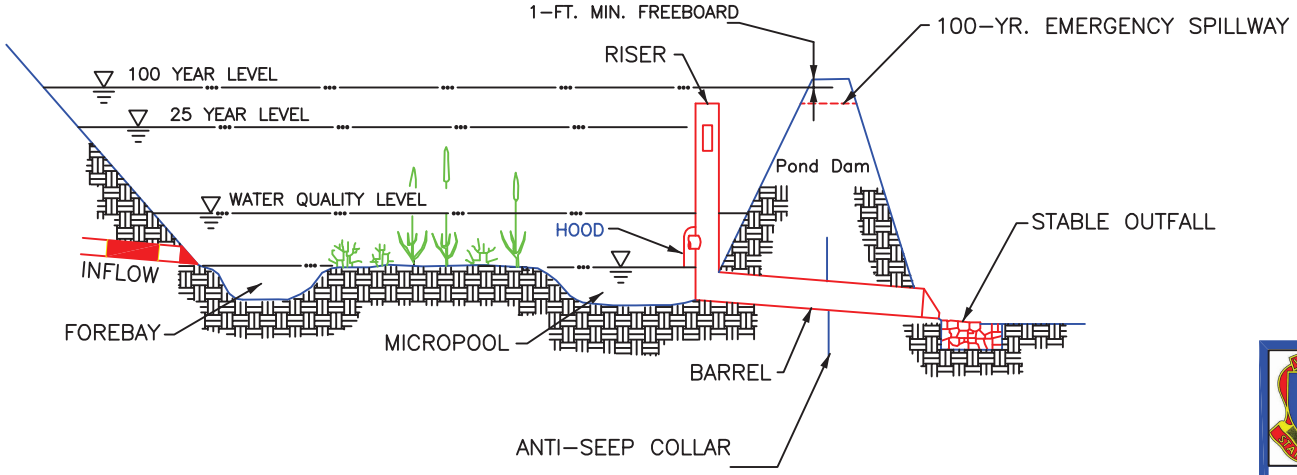

PROFILE

Fort Jackson
Land Disturbance Handbook

MICROPOOL EXTENDED DETENTION POND

STANDARD DRAWING NO. WQ-03 Page 1 of 2

MICROPOOL EXTENDED DETENTION POND

The micropool extended pond is a variation of the wet extended detention pond where only a small "micropool" is maintained at the outlet of the pond. The outlet structure is designed to detain the water quality volume for 24-hours. The micropool prevents re-suspension of previously settled sediments and prevents clogging of the low flow orifice.

Installation:

A forebay shall be provided for all inlets to a micropool extended water quality pond and shall be placed upstream of the micropool area. The forebay is separated from the micropool by a berm that may be constructed of earth, stones, riprap, gabions, or geo-textiles. The top of the forebay barrier shall be equal to the normal pool elevation, and may extend above the elevation of the permanent pool. A TRM lined low flow channel shall be constructed to convey flow from the forebay to the micropool area.

The micropool shall be four (4) to six (6) feet in depth.

A low flow orifice shall be installed to slowly release the water quality volume. The low flow orifice shall be protected from clogging by designing appropriate trash guards. Acceptable trash guards include:

Hoods that extend at least 6-inches below the water quality pool water surface elevation.

Reverse flow pipes where the outlet structure inlet is located at least 6-inches below the water quality water surface elevation.

Emergency spillways shall be installed to pass the post-development 100-year 24-hour storm event without overtopping any dam structures.

Inspection and Maintenance:

The side slopes of the pond shall be mowed monthly.

Since decomposing vegetation captured in the wetpond can release pollutants, especially nutrients, it may be necessary to harvest dead vegetation annually. Otherwise the decaying vegetation can export pollutants out of the pond and can cause nuisance conditions to occur.

Debris shall be cleared from all inlet and outlet structures monthly.

All eroded or undercut areas shall be repaired as needed.

A sediment marker shall be placed in the forebay to determine when sediment removal is required.

Sediment accumulations in the main pond area shall be monitored and sediment shall be removed when the permanent pool volume has been significantly filled and/or the pond becomes eutrophic.

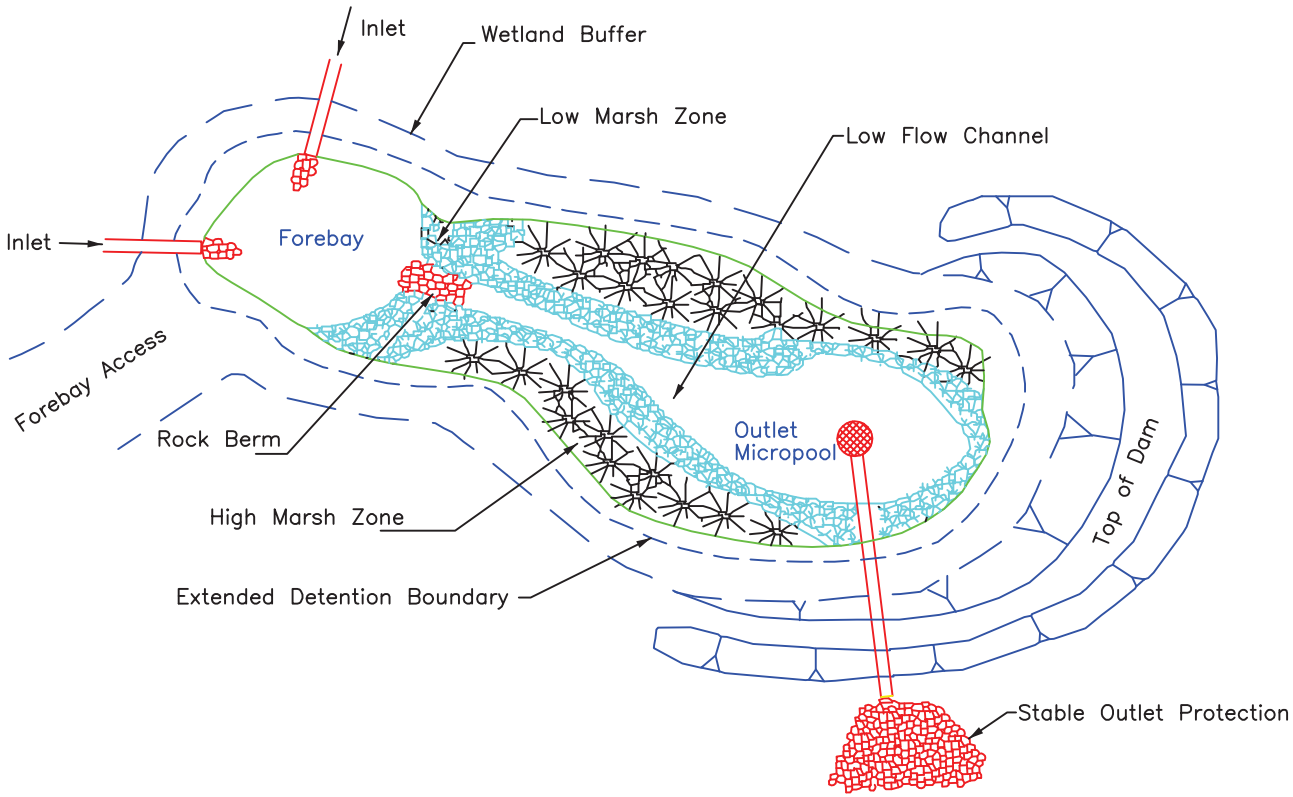

PLAN VIEW

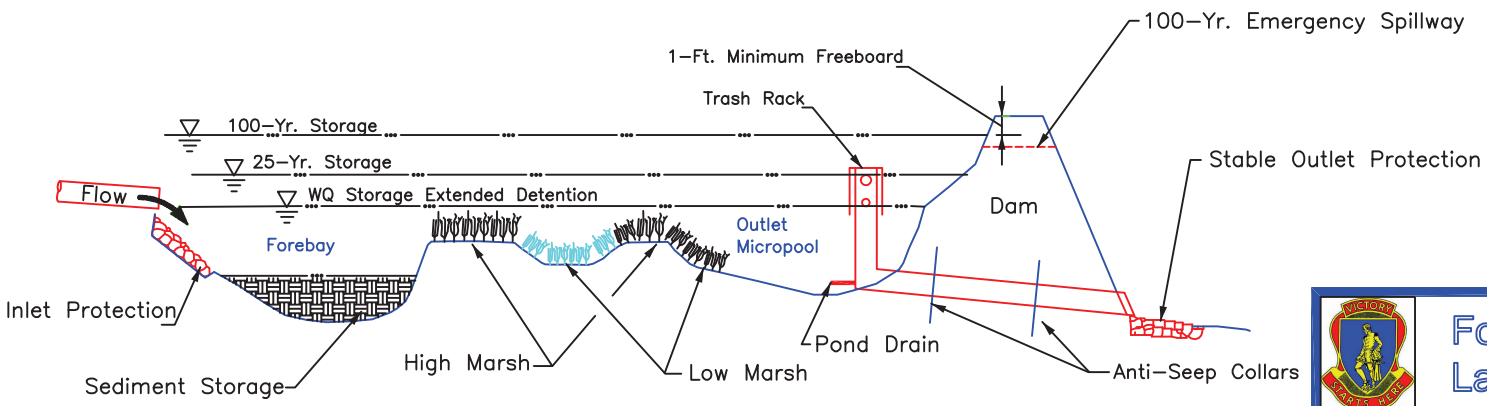

PROFILE

Fort Jackson
Land Disturbance Handbook

STORM WATER WETLAND

STANDARD DRAWING NO. WQ–04 Page 1 of 2

STORM WATER WETLAND

When and Where to Use It

Constructed shallow marsh system that is designed to treat both urban storm water runoff and control runoff volume. As storm water runoff flows through the wetland, pollutant removal is achieved through settling and uptake by marsh vegetation.

Installation:

One–half (1/2) of the total shallow water zone shall be designated as being a high marsh. This zone extends up from 6–inches below the permanent pool water level (6–inches deep).

One–half (1/2) of the total shallow water zone shall be designated as low marsh. This zone extends from a depth of 18– to 6–inches below the permanent pool water level.

All inlets shall discharge to the forebay, and be protected with a properly designed Turf Reinforcement Mat. The forebay shall be constructed of a rock berm that shall be no lower than one (1)–foot below the water quality pool depth. A lined low flow channel shall be constructed to convey flow from the forebay to the micropool area.

The outlet micropool shall be required to allow adequate depth for the extended detention release outlet to function properly and allow a drain to be installed to drain the wetland when needed. The outlet micropool shall be 4–6 feet deep.

The water quality orifice shall be protected from clogging by incorporating an appropriate trash guard. The trash guard selected shall be durable and extend at least six (6)–inches below the normal pool surface of the wetland.

A principle spillway of the constructed storm water wetland shall be installed to safely pass the 25–year 24–hour storm event. The spillway shall be equipped with a trash rack.

An emergency spillway shall be installed to safely convey discharges resulting from the 100–year 24–hour storm event.

Inspection and Maintenance:

Maintenance requirements for constructed storm water wetlands are particularly high while vegetation is being established. Monitoring during the first year is critical to the success of the wetland. Wetlands shall be monitored after all storm events greater than 2–inches of rainfall during the first year to assess erosion, flow channelization and sediment accumulation. Inspection shall be made at least once every 6–months during the first 3–years of establishment.

A sediment cleanout stake shall be placed in the forebay area to determine when sediment removal is required.

Debris shall be removed from inlet and outlet structure monthly and all eroded or undercut areas repaired as frequently as necessary.

Wetland vegetation shall be monitored and replaced as necessary once every 6–months during the first 3–years of establishment. The depth of the zones within the wetland shall be inspected and maintained annually, and invasive vegetation shall be removed annually.

PLAN VIEW

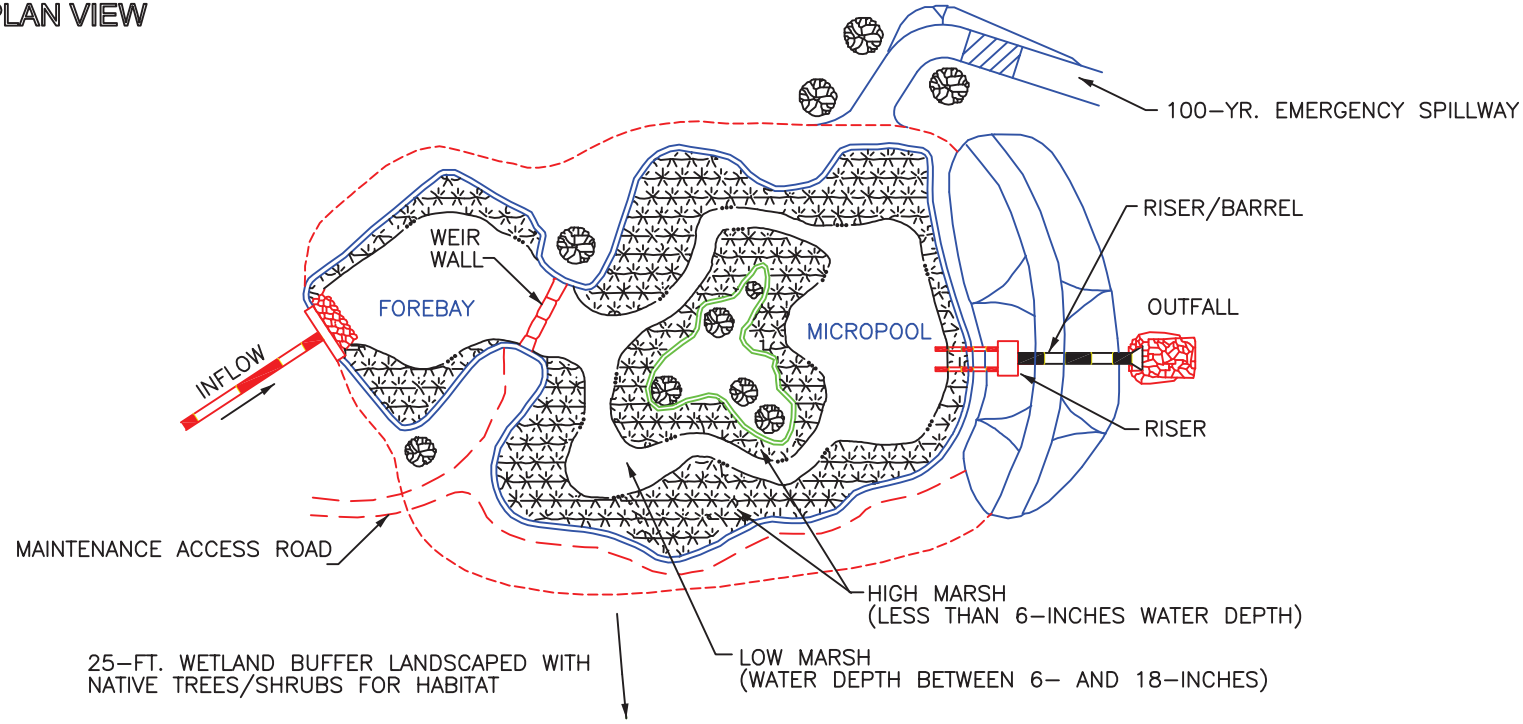

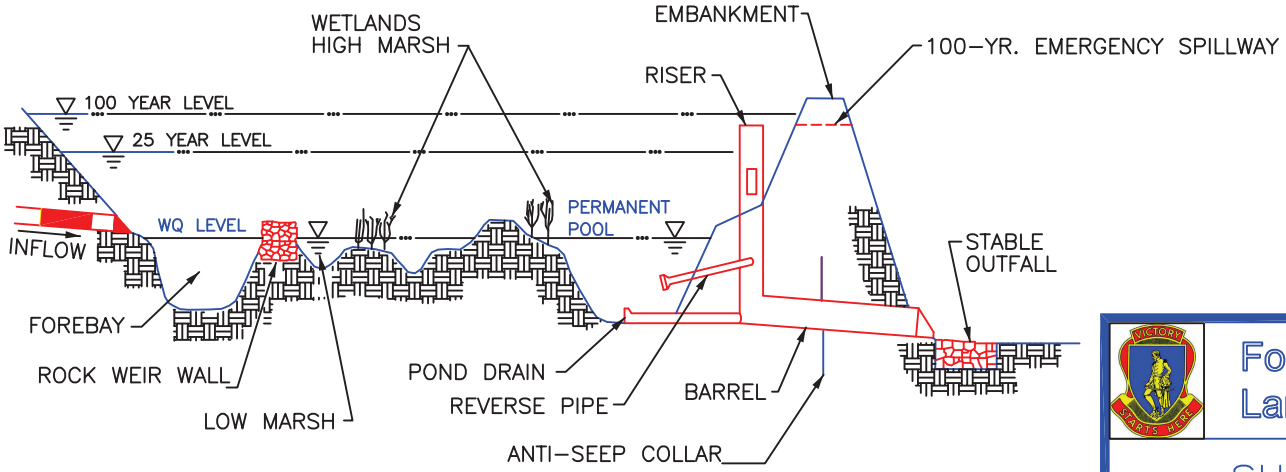

PROFILE

Fort Jackson
Land Disturbance Handbook

SHALLOW WETLAND

STANDARD DRAWING NO. WQ–05 Page 1 of 2

SHALLOW WETLAND

When and Where to Use It

Shallow wetlands provide high water quality benefits for urban runoff. A disadvantage of shallow wetlands is that a relatively large amount of land is required to store the desired water quality volume in the low- and high-marsh areas.

Installation:

One-half (1/2) of the total shallow water zone shall be designated as being a high marsh. This zone extends up from 6-inches below the permanent pool water level (6-inches deep).

One-half (1/2) of the total shallow water zone shall be designated as low marsh. This zone extends from a depth of 18- to 6-inches below the permanent pool water level.

All inlets shall discharge to the forebay, and be protected with a properly designed Turf Reinforcement Mat. The forebay shall be constructed of a rock berm that shall be no lower than the water quality pool depth.

The outlet micropool shall be required to allow adequate depth for the extended detention release outlet to function properly and allow a drain to be installed to drain the wetland when needed. The outlet micropool shall be 4-6 feet deep.

The water quality orifice shall be protected from clogging by incorporating an appropriate trash guard. The trash guard selected shall be durable and extend at least six (6)-inches below the normal pool surface of the wetland.

A principle spillway of the constructed storm water wetland shall be installed to safely pass the 25-year 24-hour storm event. The spillway shall be equipped with a trash rack.

An emergency spillway shall be installed to safely convey discharges resulting from the 100-year 24-hour storm event.

Inspection and Maintenance:

Maintenance requirements for constructed storm water wetlands are particularly high while vegetation is being established. Monitoring during the first year is critical to the success of the wetland. Wetlands shall be monitored after all storm events greater than 2-inches of rainfall during the first year to assess erosion, flow channelization and sediment accumulation. Inspection shall be made at least once every 6-months during the first 3-years of establishment.

A sediment cleanout stake shall be placed in the forebay area to determine when sediment removal is required.

Debris shall be removed from inlet and outlet structure monthly and all eroded or undercut areas repaired as needed.

Wetland vegetation shall be monitored and replaced as necessary once every 6-months during the first 3-years of establishment. The depth of the zones within the wetland shall be inspected and maintained annually, and invasive vegetation shall be removed annually.

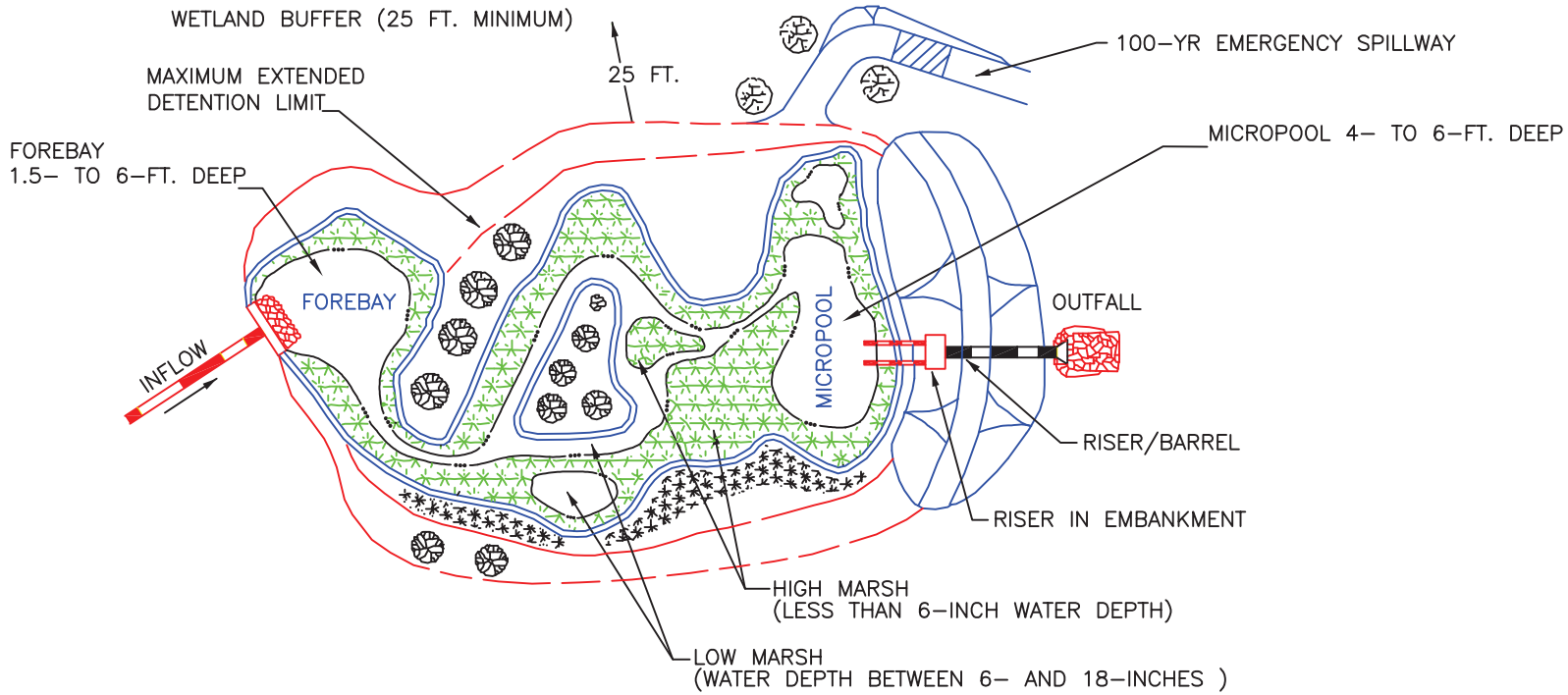

PLAN VIEW

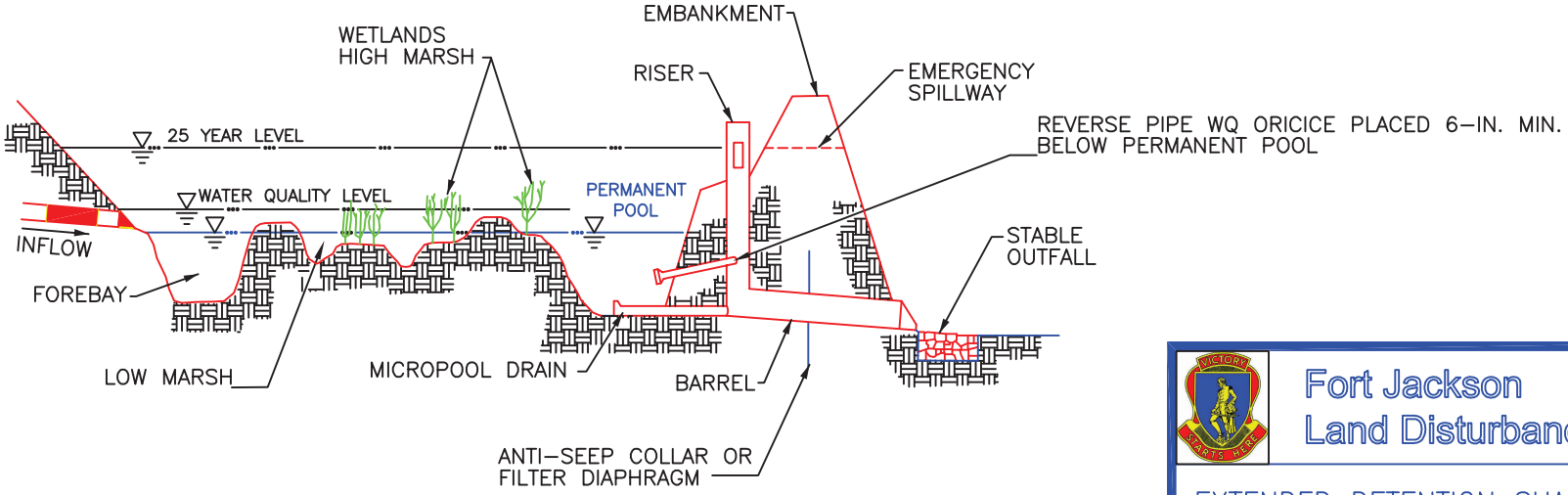

PROFILE

Fort Jackson
Land Disturbance Handbook

EXTENDED DETENTION SHALLOW WETLAND

STANDARD DRAWING NO. WQ–06 Page 1 of 2

EXTENDED DETENTION SHALLOW WETLAND

When and Where to Use It

This application can treat a greater volume of storm water in a smaller space than the shallow wetland design because part of the water quality treatment volume is provided as extended detention above the surface of the marsh and is released over a period of 24–hours. Plants that can tolerate both wet and dry periods are required in the extended detention area.

Installation:

One–half (1/2) of the total shallow water zone shall be designated as being a high marsh. This zone extends up from 6–inches below the permanent pool water level (6–inches deep).

One–half (1/2) of the total shallow water zone shall be designated as low marsh. This zone extends from a depth of 18– to 6–inches below the permanent pool water level.

All inlets shall discharge to the forebay, and be protected with a properly designed Turf Reinforcement Mat. The forebay shall be constructed of an earthen berm that shall be no lower than the normal permanent pool depth.

The outlet micropool shall be required to allow adequate depth for the extended detention release outlet to function properly and allow a drain to be installed to drain the wetland when needed. The outlet micropool shall be 4–6 feet deep.

The water quality orifice shall be protected from clogging by incorporating an appropriate trash guard. The trash guard selected shall be durable and extend at least six (6)–inches below the normal pool surface of the wetland.

A principle spillway of the constructed storm water wetland shall be installed to safely pass the 25–year 24–hour storm event. The spillway shall be equipped with a trash rack.

An emergency spillway shall be installed to safely convey discharges resulting from the 100–year 24–hour storm event.

Inspection and Maintenance:

Maintenance requirements are particularly high while vegetation is being established. Monitoring during the first year is critical to the success of the wetland, and should be done after all storm events greater than 2–inches of rainfall to assess erosion, flow channel–ization and sediment accumulation. Inspection shall be made at least once every 6–months during the first 3–years of establishment.

A sediment cleanout stake shall be placed in the forebay area to determine when sediment removal is required.

Debris shall be removed from inlet and outlet structure monthly and all eroded or undercut areas repaired as needed.

Wetland vegetation shall be monitored and replaced as necessary once every 6–months during the first 3–years of establishment. The depth of the zones shall be inspected and maintained annually and invasive vegetation shall be removed annually.

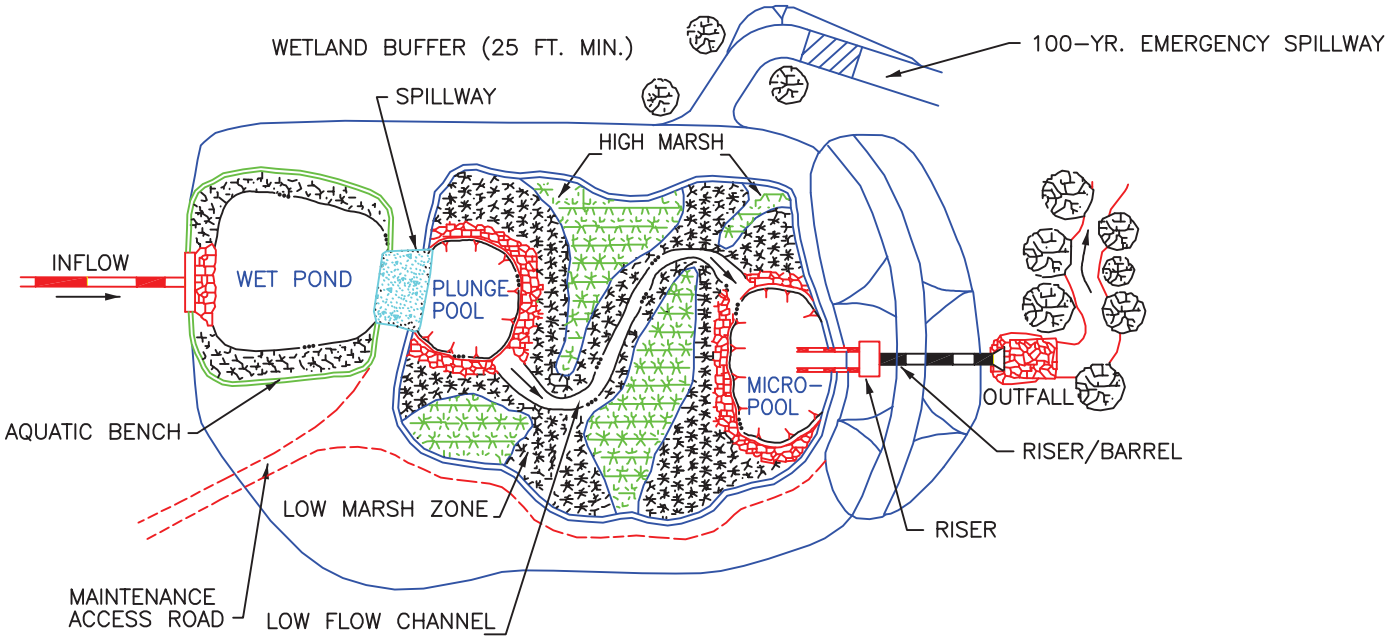

PLAN VIEW

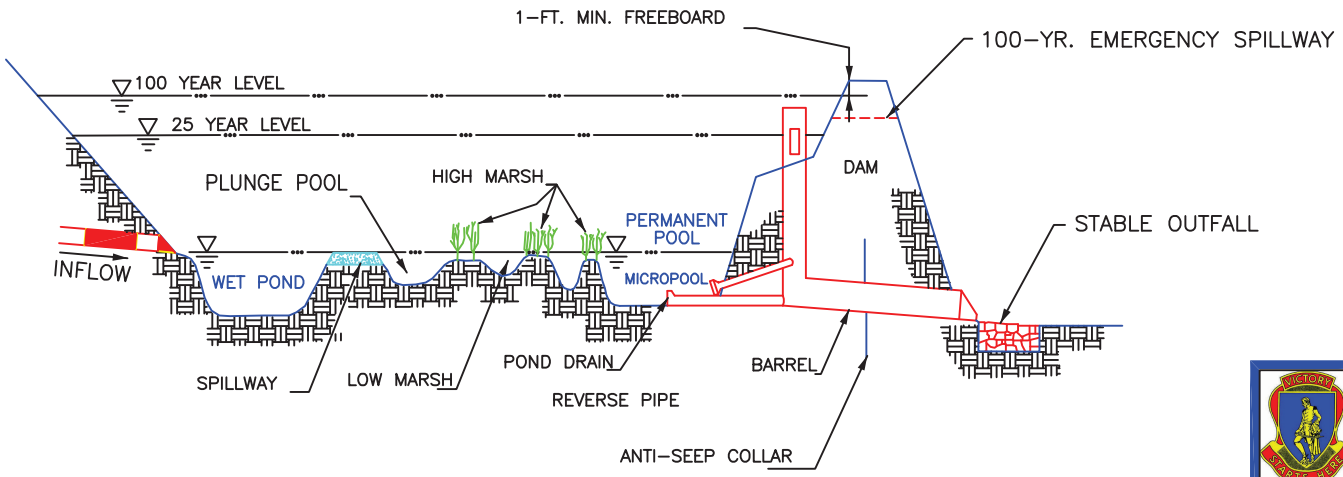

PROFILE

Fort Jackson
Land Disturbance Handbook

POND/WETLAND SYSTEM

STANDARD DRAWING NO. WQ-07 Page 1 of 2

POND/WETLAND SYSTEM

When and Where to Use It

The system has two separate cells, a wet pond and a shallow marsh. The wet pond is designed to trap sediment and reduce runoff velocities before the runoff enters the shallow marsh. The primary water quality benefits are achieved in the shallow wetland. Less land is required for the pond/wetland system than the shallow wetland and the extended detention shallow wetland.

Installation:

One–half ($\frac{1}{2}$) of the total shallow water zone shall be high marsh. This zone extends up from 6–inches below the permanent pool water level (6–in deep). One–half ($\frac{1}{2}$) of the total shallow water zone shall be low marsh. This zone extends from a depth of 18– to 6–inches below the permanent pool water level.

All inlets shall discharge to wet pond area, and be protected with a Turf Reinforcement Mat or other acceptable inlet protection. The wet pond shall be 4– to 6–feet deep and have a designed overflow spillway that discharges to a plunge pool. The plunge pool shall be 4– to 6–feet deep that having a lined low flow channel to convey flow from the plunge pool to the micropool area.

The outlet micropool shall be required to allow adequate depth for the extended detention release outlet to function properly and allow a drain to be installed to drain the wetland when needed. The outlet micropool shall be 4–6 feet deep.

The water quality orifice shall be protected from clogging by incorporating an appropriate trash guard. The trash guard selected shall be durable and extend at least six (6)–inches below the normal pool surface of the wetland.

A principle spillway of the constructed storm water wetland shall be installed to safely pass the 25–year 24–hour storm event. The spillway shall be equipped with a trash rack.

An emergency spillway shall be installed to safely convey discharges resulting from the 100–year 24–hour storm event.

Inspection and Maintenance:

Maintenance requirements for constructed storm water wetlands are particularly high while vegetation is being established. Monitoring during the first year is critical to the success of the wetland. Wetlands shall be monitored after all storm events > 2–inches of rainfall during the first year to assess erosion, flow channelization and sediment accumulation. Inspection shall be made at least once every 6–months during the first 3–years of establishment.

A sediment cleanout stake shall be placed in the forebay area to determine when sediment removal is required.

Debris shall be removed from inlet and outlet structure monthly and all eroded or undercut areas repaired as needed..

Wetland vegetation shall be monitored and replaced as necessary once every 6–months during the first 3–years of establishment. The depth of the zones shall be inspected and maintained annually, and invasive vegetation shall be removed annually.

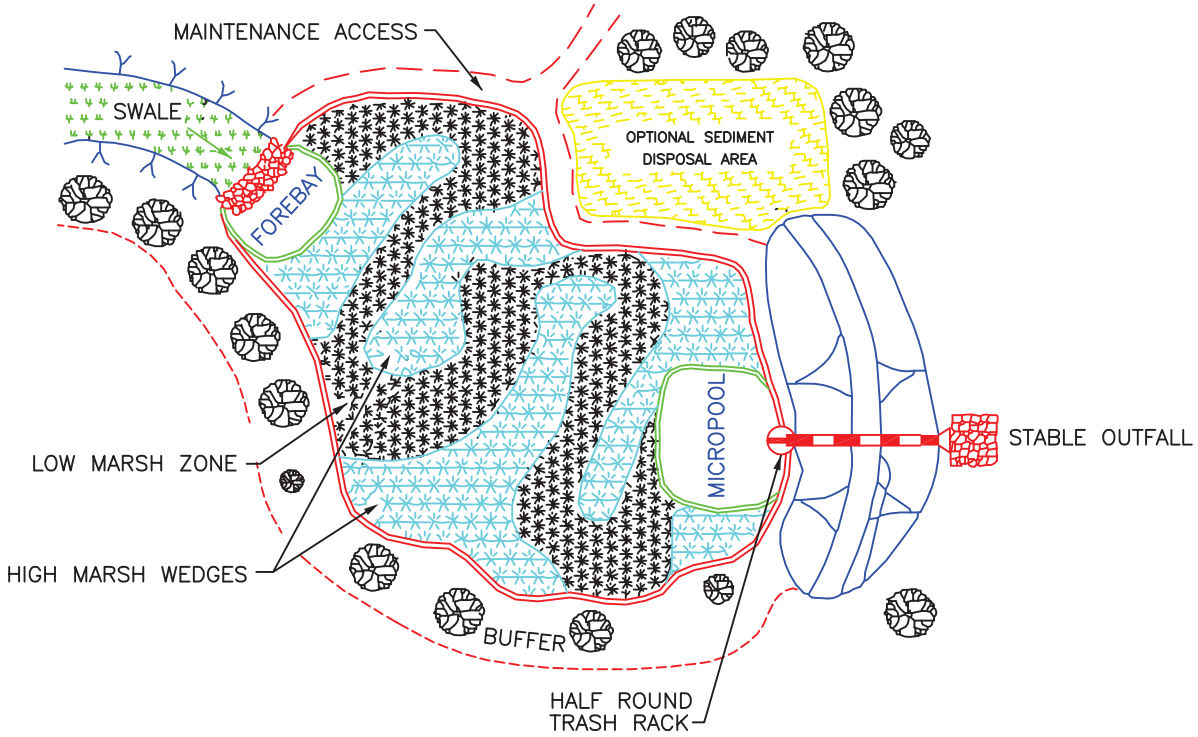

PLAN VIEW

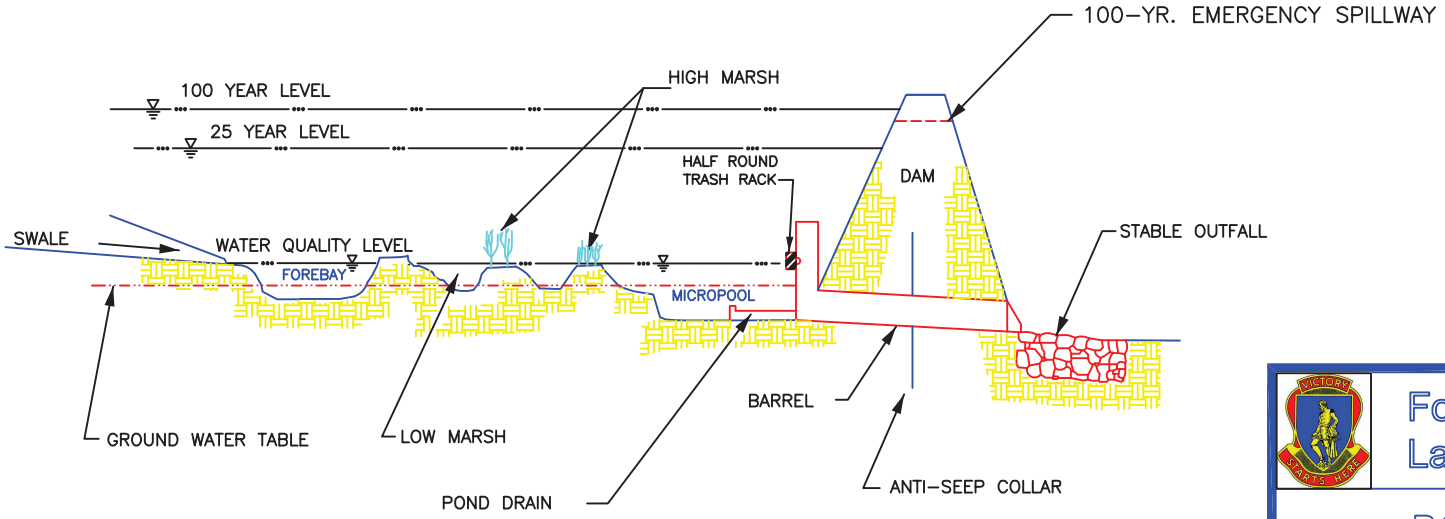

PROFILE

Fort Jackson
Land Disturbance Handbook

POCKET WETLAND

STANDARD DRAWING NO. WQ-08 Page 1 of 2

POCKET WETLAND

When and Where to Use It

A pocket wetland is intended for smaller drainage areas from 5 to 10 acres, and requires excavating down to the water table for a reliable source of water to support the wetland vegetation.

Installation:

One–half ($\frac{1}{2}$) of the total shallow water zone shall be designated as being a high marsh, the other as low marsh. The high zone extends up from 6–inches below the permanent pool water level (6–inches deep). The low marsh extends from a depth of 18– to 6–inches below the permanent pool water level.

All inlets shall discharge to forebay through open vegetated swales. The forebay is separated from the pocket wetland area by barriers or baffles that may be constructed of earth, stones, riprap, gabions, or geotextiles. The top of the forebay shall be equal to or may extend above the water quality permanent pool elevation.

The outlet micropool shall be required to allow adequate depth for the extended detention release outlet to function properly and allow a drain to be installed to drain the wetland when needed. The outlet micropool shall be 4– to 6–feet deep.

The water quality orifice shall be protected from clogging by incorporating an appropriate trash guard. The trash guard selected shall be durable and extend at least six (6)–inches below the normal pool surface of the micropool.

A principle spillway of the constructed storm water wetland shall be installed to safely pass the 25–year 24–hour storm event. The spillway shall be equipped with a trash rack.

An emergency spillway shall be installed to safely convey discharges resulting from the 100–year 24–hour storm event.

Inspection and Maintenance:

Maintenance requirements for constructed storm water wetlands are particularly high while vegetation is being established. Monitoring during the first year is critical to the success of the wetland. Wetlands shall be monitored after all storm events greater than 2–inches of rainfall during the first year to assess erosion, flow channelization and sediment accumulation. Inspection shall be made at least once every 6–months during the first 3–years of establishment.

A sediment cleanout stake shall be placed in the forebay area to determine when sediment removal is required.

Debris shall be removed from inlet and outlet structure monthly and all eroded or undercut areas repaired as needed..

Wetland vegetation shall be monitored and replaced as necessary once every 6–months during the first 3–years of establishment. The depth of the zones shall be inspected and maintained annually, and invasive vegetation shall be removed annually.

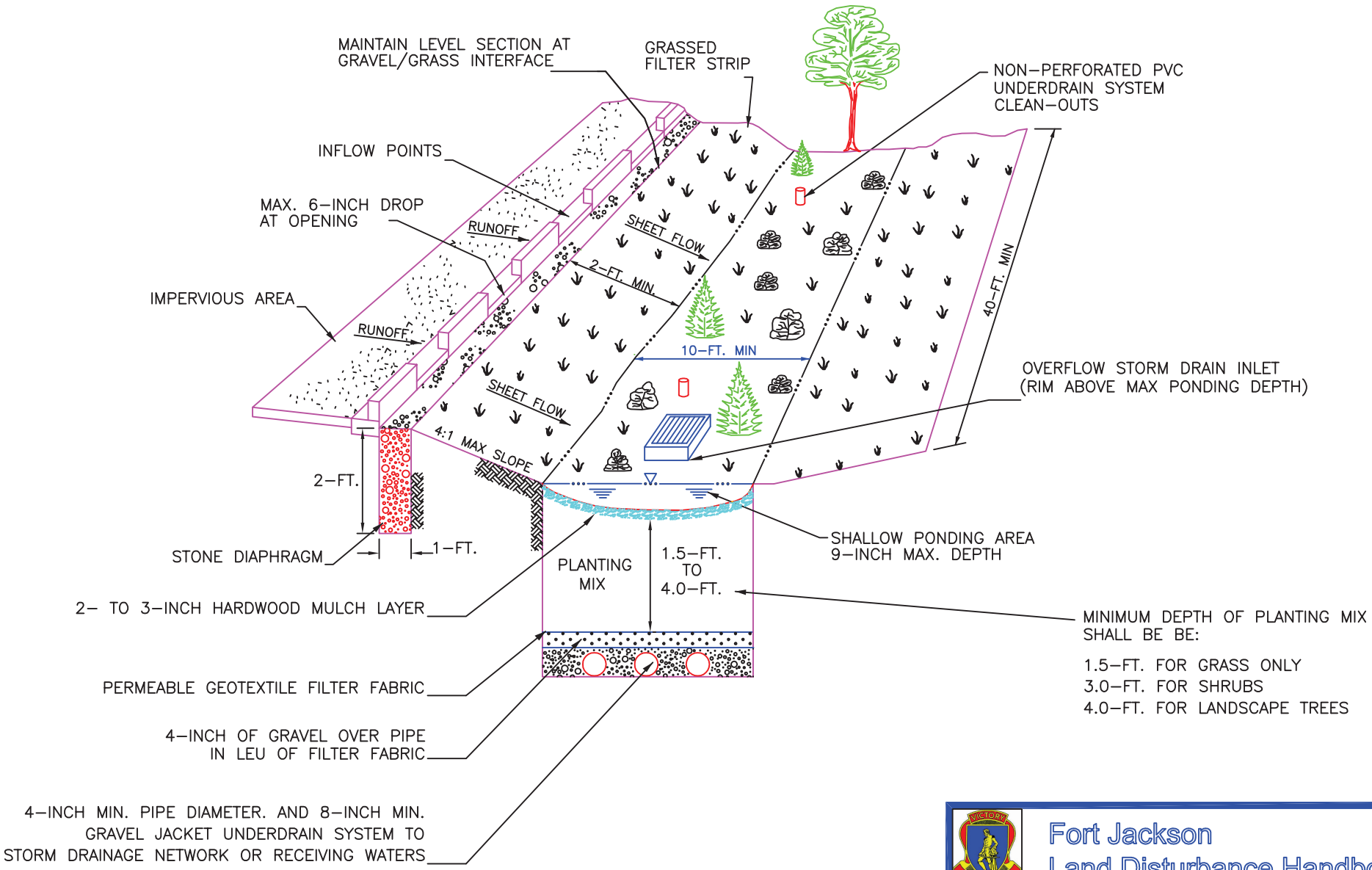

SOURCE: ADAPTED FROM PRINCE GEORGE'S COUNTY DESIGN MANUAL FOR THE USE OF BIORETENTION IN STORMWATER MANAGEMENT, 1993

Fort Jackson
Land Disturbance Handbook

TYPICAL BIORETENTION AREA

STANDARD DRAWING NO. WQ-09 Page 1 of 3

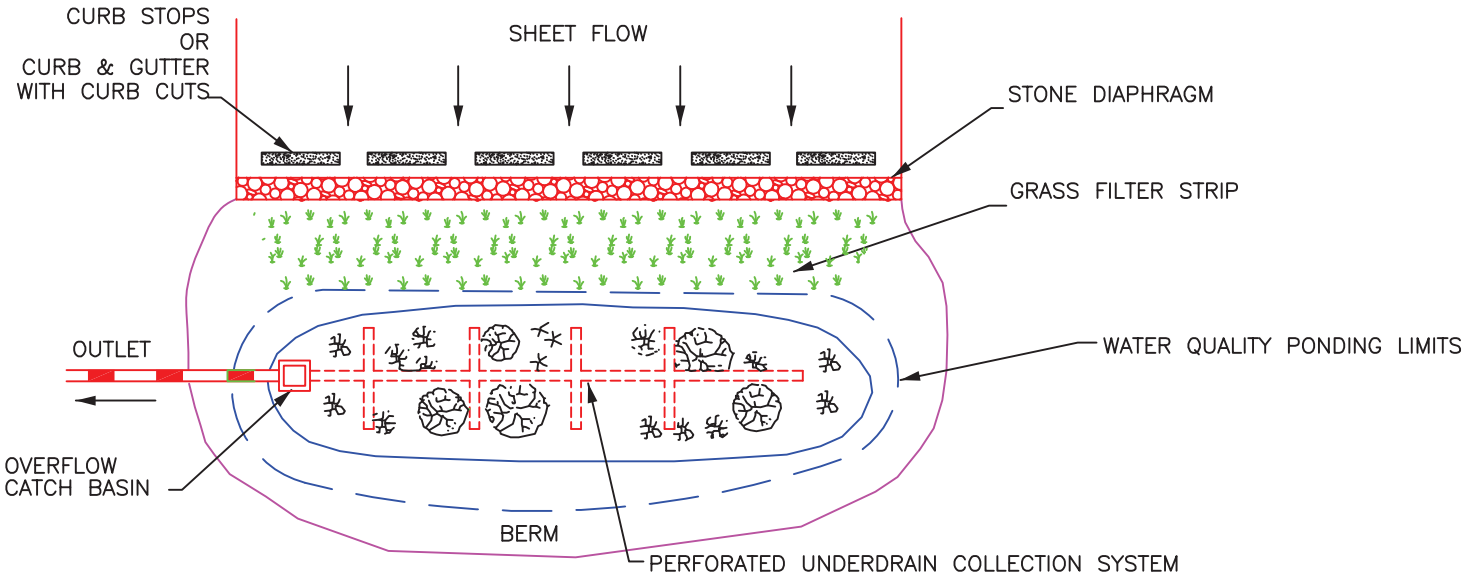

PLAN VIEW

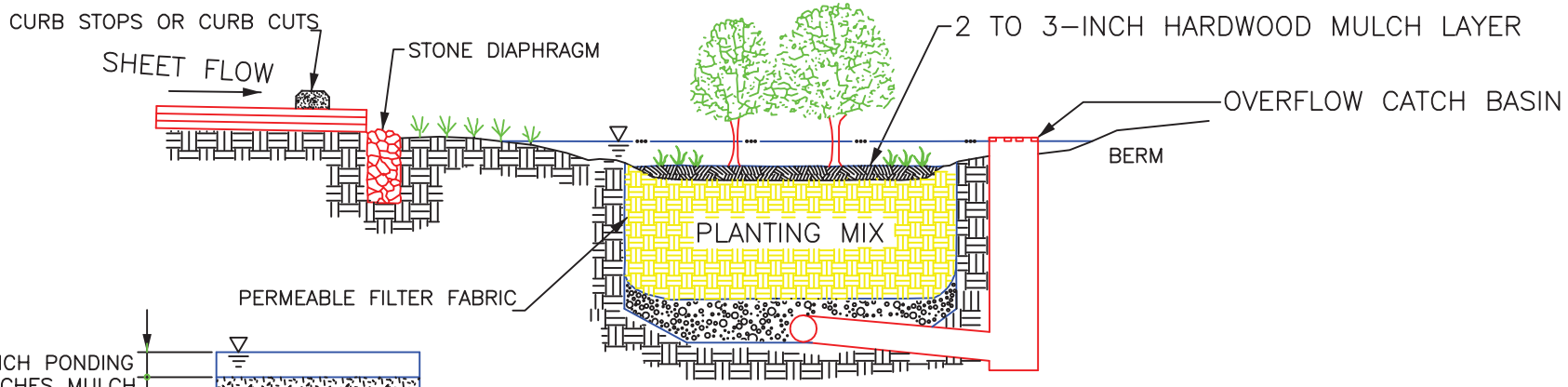

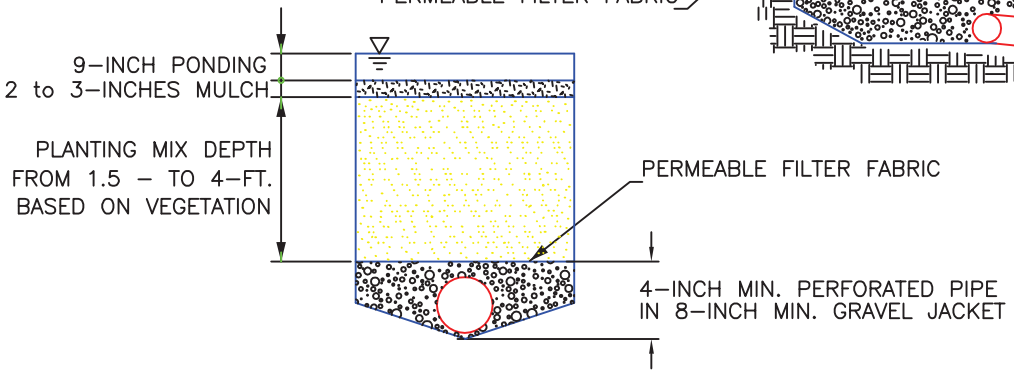

TYPICAL SECTION

Fort Jackson
Land Disturbance Handbook

TYPICAL BIORETENTION AREA

STANDARD DRAWING NO. WQ-09 Page 2 of 3

TYPICAL BIORETENTION AREA

When and Where to Use It

Bioretention drainage areas should range from 1–2 acres and should only be placed where the contributing area is well stabilized to prevent excessive debris and sediment from collecting in the bioretention area.

Installation:

Bioretention areas work best when constructed off–line, capturing only the water quality volume. Excess runoff shall be diverted away from the bioretention area or should be collected by an overflow catch basin.

The minimum width of the bioretention area shall be ten (10)–feet and the minimum length shall be forty (40)–feet.

The planting mix shall be composed of materials as outlined in the Planting Mix tables on WQ–09 page 4.
The under drain system shall consist of a minimum 4–inch diameter perforated PVC pipe, an 8–inch minimum gravel jacket filter layer, and geotextiles to separate the piping form the native soils and the gravel from the planting mixture. Several non–perforated PVC pipes shall vertically connect to the under drain pipe and extend to the surface of the planting mix to provide access to clean out the perforated drainage pipe.

An overflow system shall be designed to pass runoff volumes greater than the water quality volume away from the bioretention area. If the bioretention area collects sheet flow from a parking area, a catch basin shall be designed to be at the elevation of the maximum 9–inch ponding depth of the bioretention area to carry the excess runoff from the bioretention area to the storm sewer system or receiving natural water system.

Inspection and Maintenance:

Regular inspection and maintenance is critical to the effective operation of bioretention areas as designed. Maintenance responsibility of the bioretention area shall be vested with a responsible authority by means of a legally binding and enforceable maintenance agreement that is executed as a condition of plan approval.

The surface of the ponding area may become clogged with fine sediments over time. Core aeration or cultivating unvegetated areas may be required to ensure adequate filtration.

Other required maintenance includes but is not limited to:

Pruning and weeding to maintain appearance shall be done periodically as needed.
Hardwood mulch shall be replaced or replenished 2–to 3–inches thick as needed.
Trash and debris shall be removed periodically as needed.

TYPICAL BIORETENTION AREA (from Stormtalk)

1. THE SOIL SHALL BE A UNIFORM MIX, FREE OF STONES, STUMPS, ROOTS, OR OTHER SIMILAR OBJECTS LARGER THAN TWO INCHES. NO OTHER MATERIALS OR SUBSTANCES SHALL BE MIXED OR DUMPED WITHIN THE BIO–RETENTION THAT MAY BE HARMFUL TO PLANT GROWTH, OR PROVE A HINDRANCE TO THE PLANTING OR MAINTENANCE OPERATIONS. THE PLANTING SOIL SHALL BE FREE OF BERMUDA GRASS, QUACKGRASS, JOHNSON GRASS, MUGWORT, NUTSEDGE, POISON IVY, CANADIAN THISTLE, TEARTHUB, OR OTHER NOXIOUS WEEDS.

3. PLACEMENT OF THE PLANTING SOIL IN THE BIORETENTION AREA SHOULD BE IN LIFTS OF 12 TO 18" AND LIGHTLY COMPACTED. MINIMAL COMPACTION EFFORT CAN BE APPLIED TO THE SOIL BY TAMPING WITH A BUCKET FROM A DOZER OR BACKHOE. REFER ALSO TO "COMPACTION."

4. INDIVIDUAL PLANTING SHALL BE MULCHED. ACCEPTABLE MULCH SHALL BE SHREDDED HARDWOOD ONLY. MULCH MUST BE WELL AGED, UNIFORM IN COLOR, AND FREE OF FOREIGN MATERIAL INCLUDING PLANT MATERIAL. WELL AGED MULCH IS DEFINED AS MULCH THAT HAS BEEN STOCKPILED OR STORED FOR AT LEAST TWELVE (12) MONTHS.

5. PROVIDE CLEAN SAND, FREE OF DELETERIOUS MATERIALS. SAND SHALL MEET PLANTING MIX TABLES.

6. GEOTEXTILE FABRIC SHALL MEET ASTM D–571 (PUNCTURE STRENGTH – 125 LB) ASTM D–1117 (MULLEN BURST STRENGTH – 400 PSI) ASTM D–1682 (TENSILE STRENGTH – 300 LB) FABRIC SHALL HAVE 0.08" THICK E.O.S. OF #80 SIEVE, AND MAINTAIN 125 GPM PER SQ.FT. FLOW RATE.

7. UNDERDRAIN GRAVEL BLANKET SHALL BE DOUBLE WASHED, #57 STONE, 1– " IN SIZE. PEA GRAVEL SHALL BE WASHED, RIVER RUN, ROUND DIAMETER, – " IN SIZE.

Item	Percent of Total Filter Media by Weight	ASTM Sieve Size	Percent Passing by Weight
Sand* Clean, Washed, Well Graded, No Organic Material *Aggregate No . FA-10 ASTM C-33 Concrete Sand AASHTO M-6 AASHTO M-43, No. 9 or No. 10*	80% Max	3/8 in.	100
		No. 4	95-100
		No. 8	80-100
		No. 16	50-85
		No. 30	25-60
		No. 50	10-30
		No. 100	2-10
		No. 200	0-3
Screened Topsoil *Loamy Sand or Sandy Loam ASTM D5268 (imported or manufactured topsoil) Max 5% clay content*	15% Max.	2 in.	100
		1 in.	95- 100
		No. 4	75-100
		No. 10	60-100
		No. 200	10-50
		0.002 mm	0-5
Organic Matter in the form of Compost, Leaf Compost, Peat Moss or Pinebark Nursery Mix**	5% Min	3/8 in.	85-100
		No. 8	50-80
		No. 30	0-40

Vegetation	Filter Media Depth (ft)
Turf Grass Only	2.0
Native Grasses or Shrubs	3.0
Small Trees	4.0

Fort Jackson
Land Disturbance Handbook

TYPICAL BIORETENTION AREA

STANDARD DRAWING NO. WQ–09 Page 1 of 3

PLAN VIEW

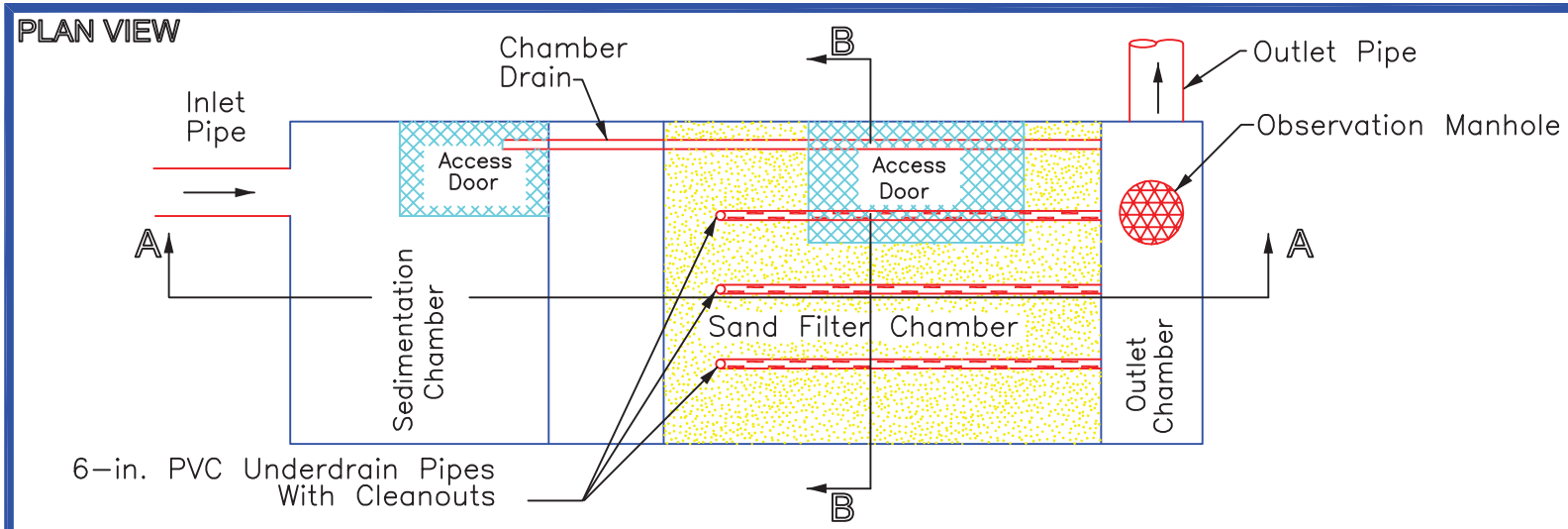

SECTION A-A

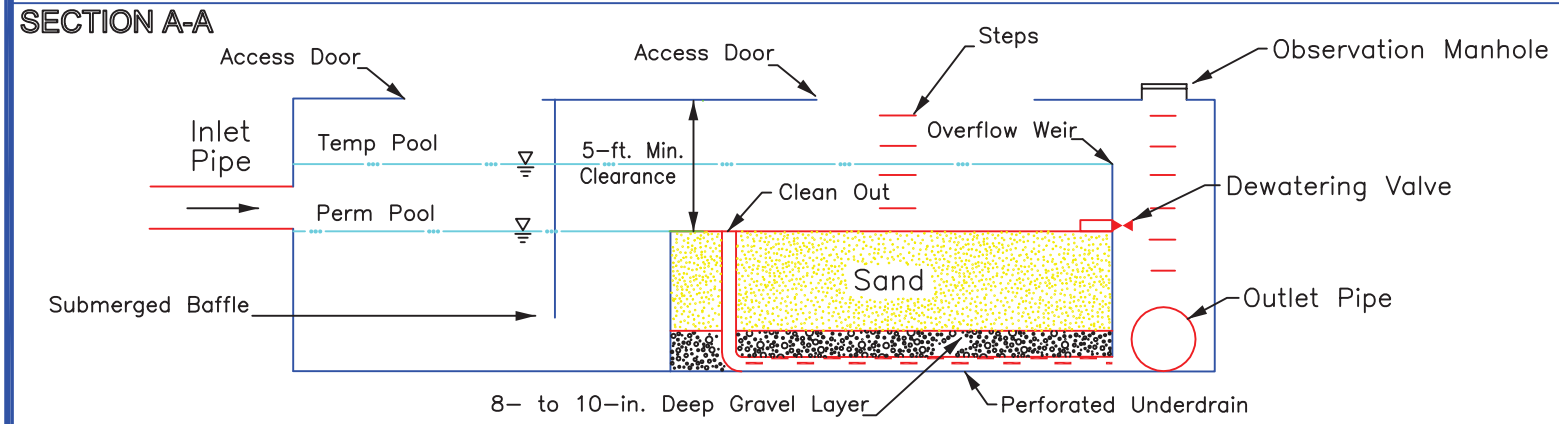

SECTION B-B

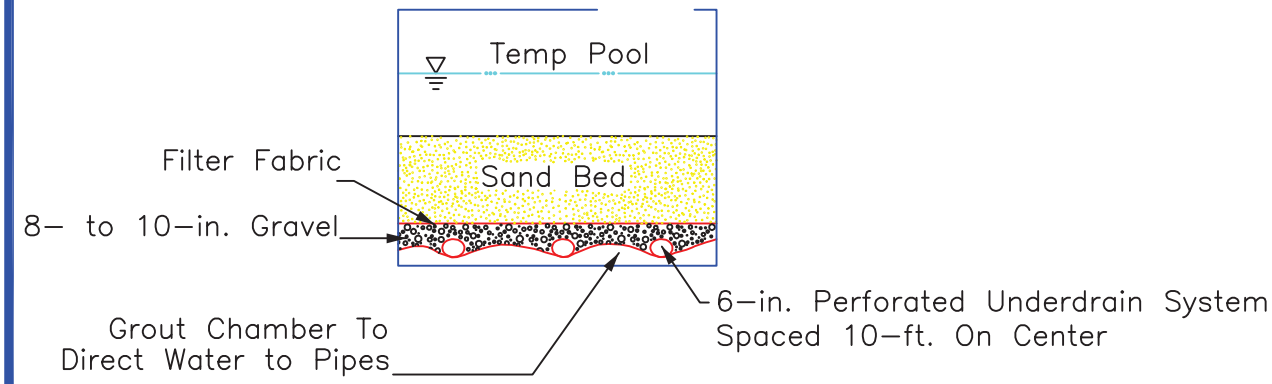

Fort Jackson
Land Disturbance Handbook

UNDERGROUND SAND FILTER (DC FILTER)

STANDARD DRAWING NO. WQ–10 Page 1 of 2

SAND FILTERS

When and Where to Use It

Sand filtration facilities are most applicable for smaller sites of 5 acres or less where the percent imperviousness of the site is very high. Sand filters shall be used on sites where the drainage area to the facility will remain well stabilized after the construction phase to prevent excess sediment and debris from permanently clogging the filter.

It is recommended that individual sand filters be sized to treat relatively small drainage area of 1 to 2 acres. The implementation of several filters on the site will prevent the entire site from being untreated if one of the filter facilities becomes clogged, requiring maintenance.

Installation:

A 5–foot minimum clearance height shall be provided between the top of the sand bed and the bottom of the concrete slab to provide clearance for maintenance. A de–watering valve shall be placed just above the sand bed layer to drain the facility in situation where the sand filter becomes clogged and requires maintenance.

An under drain system shall be used to collect the runoff water that has percolated through the sand filter. The pipe shall be 6–inch perforated schedule 40 PVC piping placed in a 8– to 10–inch deep gravel jacket. A permeable geotextile filter fabric that meets Fort Jackson specifications shall be placed between the sand and the gravel. To ensure adequate drainage, the bottom chamber shall be sloped towards the under drain pipes that shall be spaced 10–feet apart along the filter bed. The under drain system may discharge to the main storm sewer system or may outfall to an outlet chamber.

Inspection and Maintenance:

Regular inspection and maintenance is critical to the effective operation of sand filter facilities as designed. Maintenance responsibility for the sand filter shall be vested with a responsible authority by means of a legally binding and enforceable maintenance agreement that is executed as a condition of plan approval. Typical maintenance responsibilities include clearing debris and trash from all inlet and outlet structures monthly, removing trash and debris from the sediment chamber monthly, and removing all sediment from the sediment chamber annually.

A record shall be kept of the average de–watering time of the sand filter facility to determine if maintenance is required. When the filtering capacity of the sand has diminished, the top layers of the sand (2– to 3–inches) shall be removed and replaced. This typically will need to be done every 3– to 5–years.

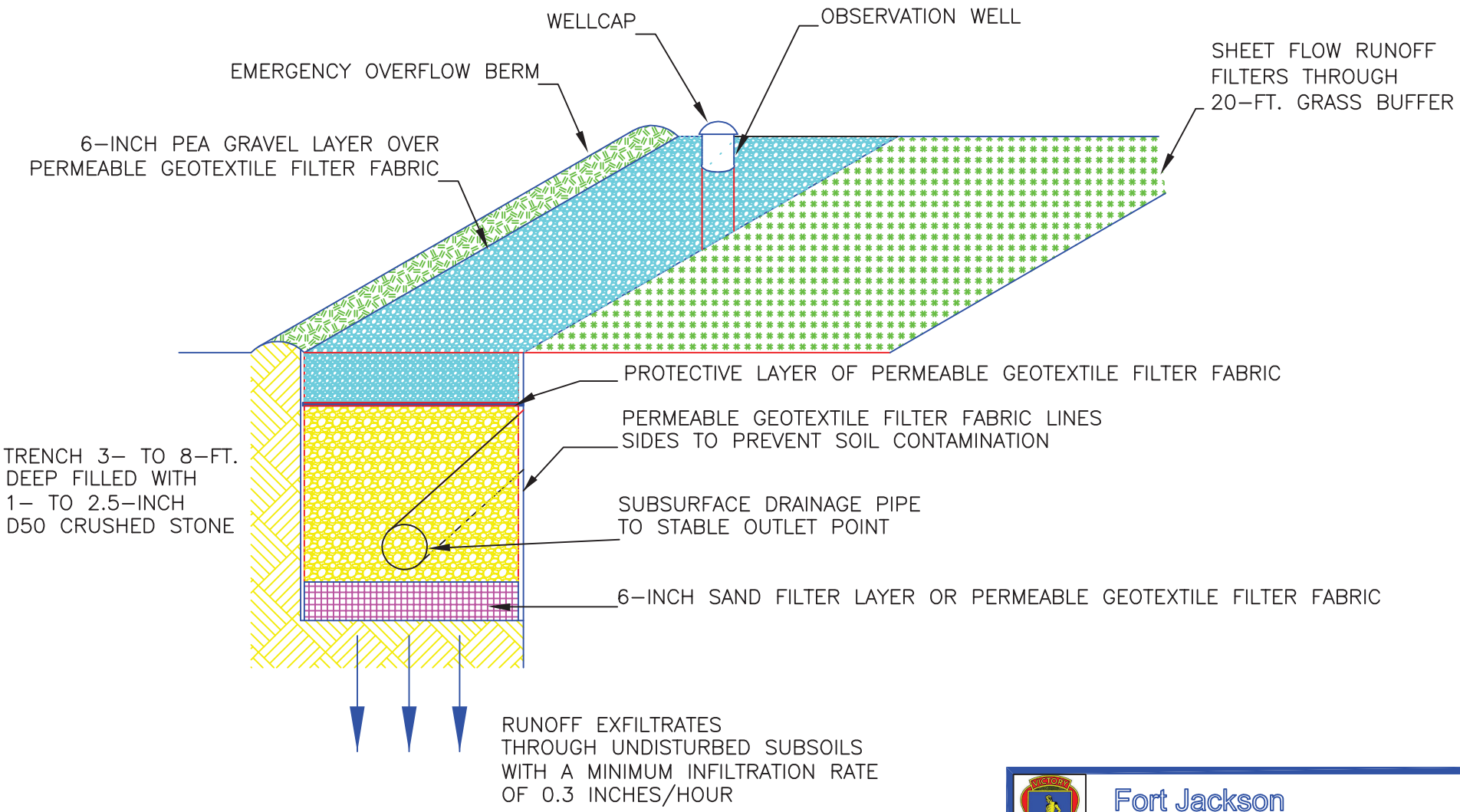

SCHEMATIC OF AN INFILTRATION TRENCHES

Fort Jackson
Land Disturbance Handbook

INFILTRATION TRENCH

STANDARD DRAWING NO. WQ–11 Page 1 of 2

INFILTRATION TRENCH

When and Where to Use It

Infiltration trenches are limited to areas with highly porous soils where the water table and or bedrock are located well below the bottom of the trench. The maximum drainage area for any one–infiltration trench shall be 5 acres. Infiltration trenches shall not be used for manufacturing and industrial sites where there is potential for high concentrations of soluble pollutants and heavy metals.

Installation:

The minimum depth of the excavated trench shall be 3–feet, the maximum depth shall be 8–feet, and the trench shall be lined with a permeable filter fabric.

The maximum width of the infiltration trench shall be twenty–five (25)–feet.

The trench excavation shall be limited to the width a depth specified in the design. Excavated material should be placed away from the open trench. The bottom of the excavated trench shall not be loaded or compacted, and should be scarified before the placement of sand or filter fabric. The sides of the trench shall be trimmed of all large roots. The sidewalls should be uniform with no voids and scarified prior to the installation of the protective filter fabric.

A 6–inch sand filter shall be located on the bottom of the trench.

The stone fill media shall consist of 1.0– to 2.5– inch D50 crushed stone with 6–inches of pea gravel located on top separated by a permeable filter fabric. This filter fabric prevents should be easily separated from the geotextiles that protect the sides of the excavated trench.

Observation wells a maximum of 100–ft apart shall be installed in every infiltration trench and shall be made of 4– to 6–inch PVC pipe. The well shall extend to the bottom of the trench. The observation well shall be installed along the centerline of the trench, and be flush with the ground elevation of the trench. The top of the well shall be capped and locked to discourage vandalism and tampering.

Inspection and Maintenance:

Regular inspection and maintenance is critical to the effective operation of infiltration trenches as designed. Maintenance responsibility shall be vested with a responsible authority by means of a legally binding and enforceable maintenance agreement that is executed as a condition of the SC DHEC Storm Water Management Permit approval.

A record shall be kept of the average de–watering time of the infiltration trench to determine if maintenance is required.

Debris and trash shall be cleared from all inlet and outlet structures monthly. Trees, shrubs, or invasive vegetation shall be removes semi–annually.

The top 6–inch layer of pea gravel and the geotextile separating the pea gravel from the stone media serve as a sediment barrier and will be required to be replaced when full of sediment.

The observation well shall be checked following 72 hours (3–days) of dry weather after a rainfall event. If complete de–watering is not observed, there may clogging and proper maintenance shall be performed.

If complete failure is observed, total rehabilitation of the trench shall be performed by excavating the trench walls to expose clean soil, and replacing the sand, filter media, gravel, and geotextiles.

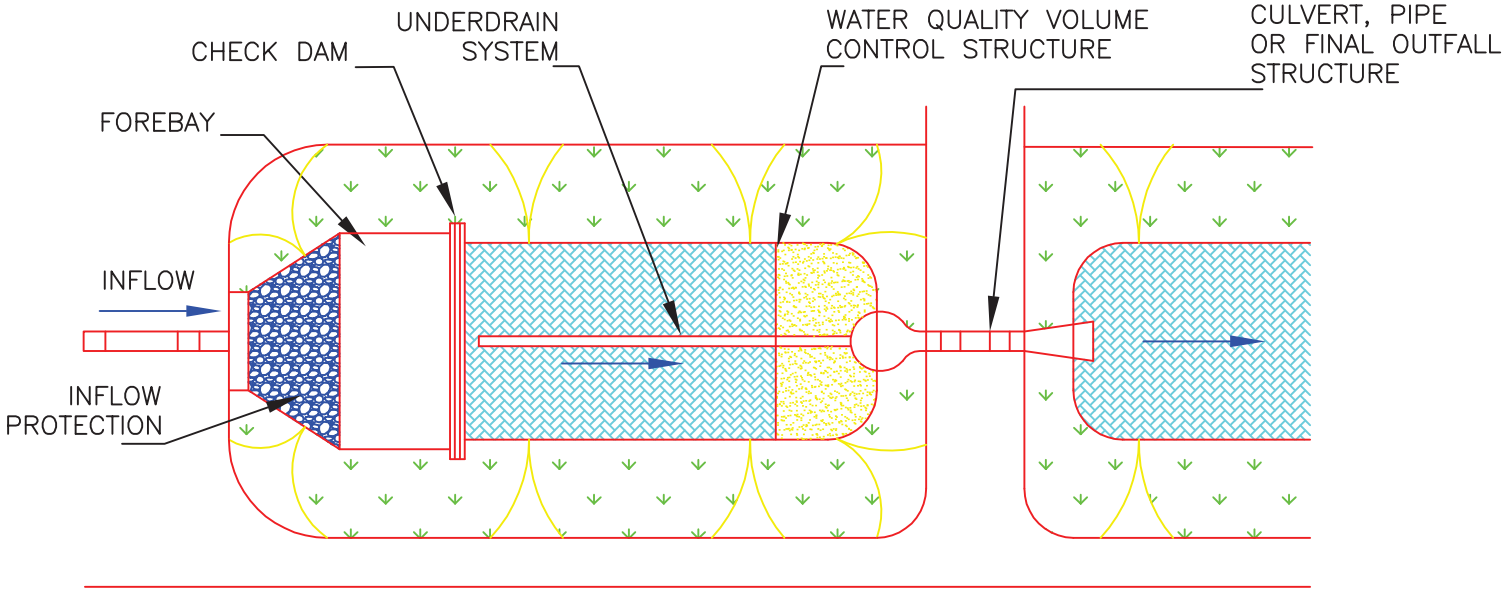

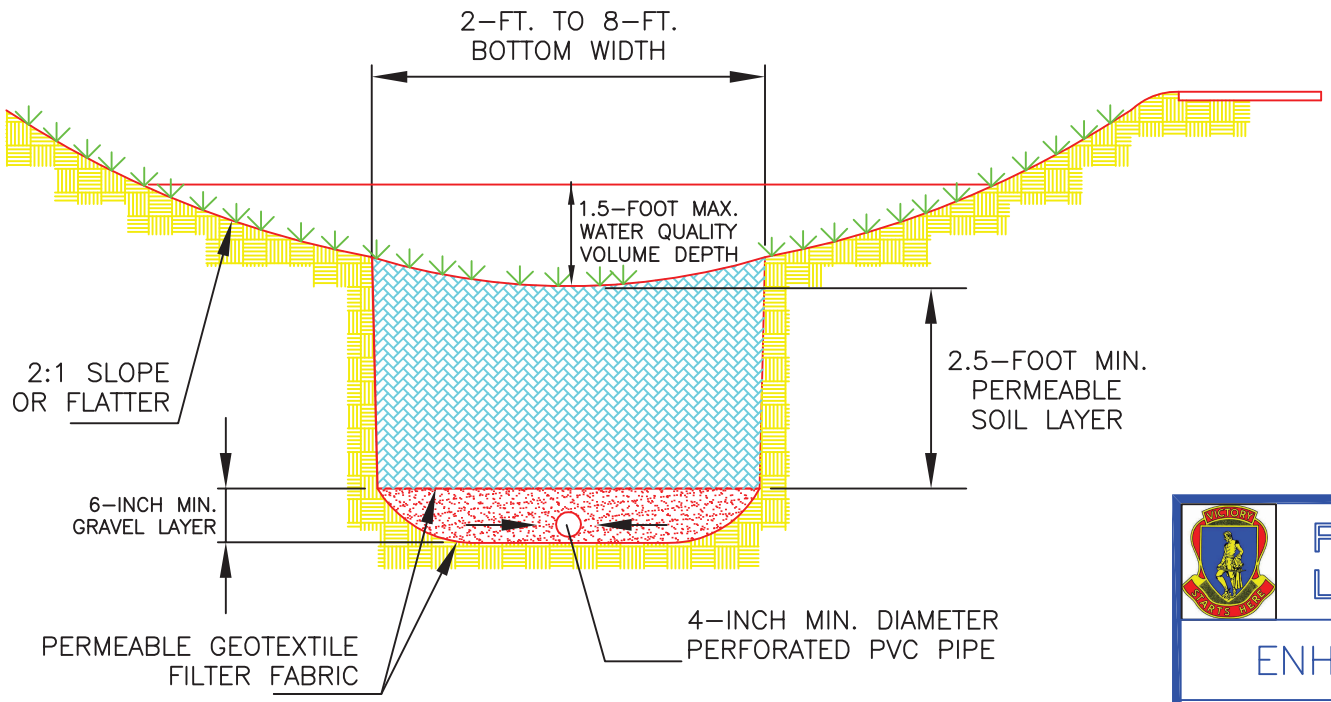

Fort Jackson
Land Disturbance Handbook

ENHANCED DRY SWALE

STANDARD DRAWING NO. WQ–12 Page 1 of 2

ENHANCED DRY SWALE

When and Where to Use It

Enhanced swales are primarily applicable in moderate to large lot residential developments and industrial areas with low to moderate density where the impervious cover (parking lots and rooftops) of the contributing drainage areas is relatively small. Enhanced swale should have a contributing drainage area less than 5 acres. Enhanced swales are also useful along rural roads and highways that have driveway entrances crossing over the swale.

Installation:

Swale slopes should be limited between 1 and 2 %, unless site topography dictates larger slopes. In this instance, drop structures may be placed in the swale to limit the slope of a particular section of the swale. Spacing between drop structures should be a minimum of 50–feet and energy dissipation techniques may need to be added on the downstream side of the drop structures.

The overall depth of the water quality runoff volume detained in the channel shall not exceed 1.5–feet.

The bottom width of the swale should range between 2– and 8–feet where applicable to ensure an adequate filtration area

The side slopes of the swale shall not exceed 2H:1V, and 4H:1V is recommended for ease of maintenance and for side inflow to remain as sheet flow.

The filter bed for an enhanced dry swale shall consist of a permeable soil layer at least 2.5–feet deep. The drainage pipe shall be a minimum 4–inch diameter perforated PVC pipe (AASHTO M 252) in a 6–inch gravel layer.

Inspection and Maintenance:

The surface of the filter bed may become clogged with fine sediments over time. Light core aeration may be required to ensure adequate filtration. Other required maintenance includes but is not limited to periodic mowing to maintain the storage volume and to maintain appearance, and the periodic removal of trash and debris as needed.

PARKING LOT BIORETENTION ISLANDS

Installation

The top width should be a minimum of 10–feet, and the depth should be at least 6–inches.

The slopes from the pavement into the island should be 2%.

Biorentention area shall be planted once all construction has ceased. Prior to planting, all debris and sediment that has collected in basin during construction shall be removed.

Minimize construction traffic over areas where bioretention areas are planned.

Specification of bioretention soils and plants is provided in other documents of the Fort Jackson Land Disturbnace Handbook, specifically, Standard Drawing WQ 09.

Inspection and Maintenance:

Islands should be inspected, every seven (7) calendar days and within 24–hours after each rainfall event that produces ½–inches or more of precipitation and repairs made as necessary.

Damage caused by construction traffic or other activity must be repaired before the end of each working day.

All plantings shall be replaced once every 2–3 years as necessary.

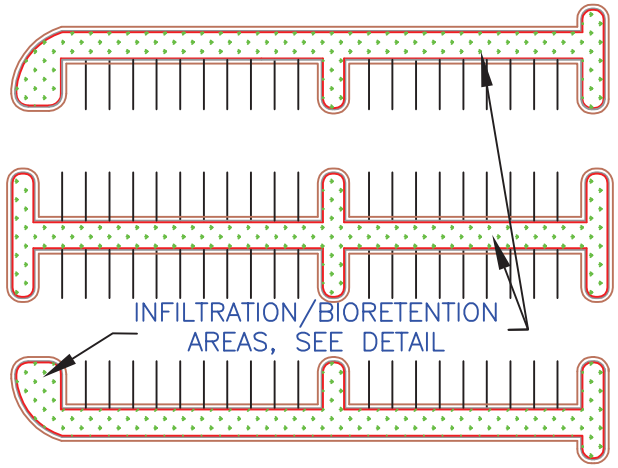

PARKING LOT SCHEMATIC WITH BIORETENTION ISLANDS

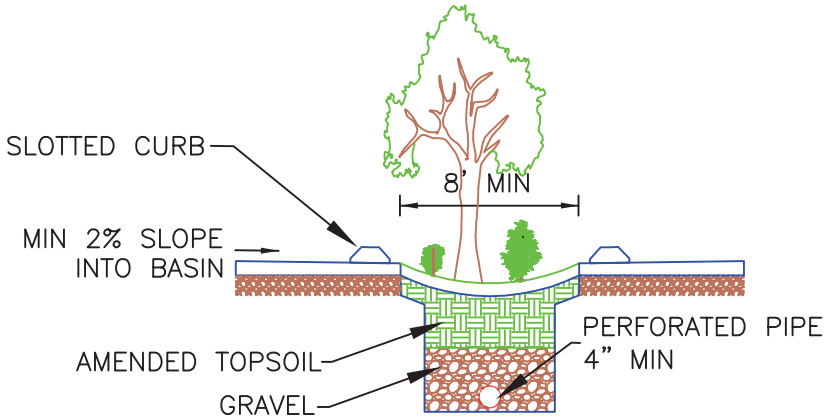

INFILTRATION/BIORETENTION ISLAND DETAIL

Fort Jackson
Land Disturbance Handbook

PARKING LOT
BIORETENTION AREA

STANDARD DRAWING NO. WQ–13 Page 1 of 1

BMP Standard Notes

When and Where to Use It

These notes should appear on any design drawing that proposes using any type of structural BMPs. Additional information on any proposed BMP should be included in detail drawing(s). Fort Jackson encourages the use of various types of BMPs, provided sufficient detail and appropriateness of use is given.

BMP Notes:

All proposed BMPs shall have accompanying drawings, design calculations, and any other necessary information.

All proposed BMPs shall be installed as directed by the design drawings. The use of the propser material, technique, and timing are crucial to a BMP that will provide the expected level and of control.

All proposed BMPs shall be maintained as directed by the design drawings. All maintenance requirements will be conducted by Fort Jackson. Fort Jackson expects that all BMPs be performing as designed prior to beginning any activities.

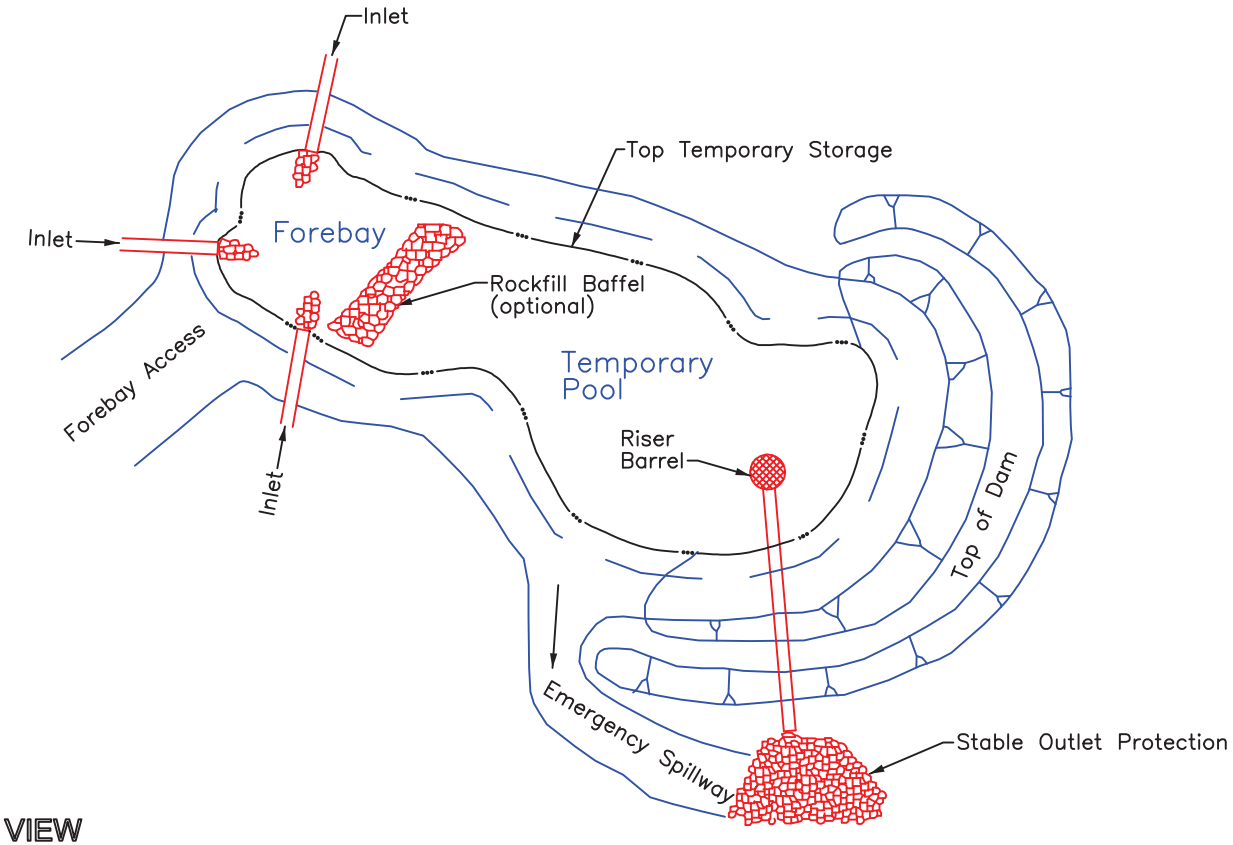

PLAN VIEW

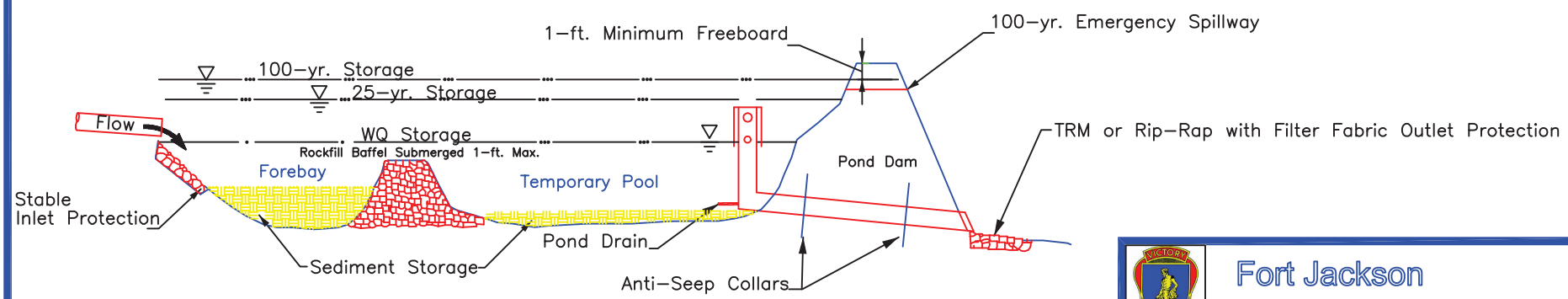

PROFILE

Fort Jackson
Land Disturbance Handbook

DRY DETENTION POND

STANDARD DRAWING NO. WQ–15 Page 1 of 2

DRY DETENTION POND

Dry ponds have no permanent pool of water but shall be designed to detain the water quality volume. Because of its greater storage capacity than wet detention ponds, dry pond generally require less area and/or excavation requirements.

Installation:

A forebay should be provided for all inlets to a dry pond. The forebay is separated from the larger wet detention pond area by barriers or baffles that may be constructed of earth, stones, riprap, gabions, or geotextiles. The top of the forebay barrier shall be a maximum of one (1)–foot below the normal pool elevation, and may extend above the elevation of the permanent pool.

A low flow orifice shall be installed to slowly release the water quality volume. The low flow orifice shall be protected from clogging by designing appropriate trash guards. Acceptable trash guards include:

Hoods that extend at least 6–inches below the permanent pool water surface elevation.

Reverse flow pipes where the outlet structure inlet is located at least 6–inches below the permanent pool water surface elevation.

Trash boxes made of sturdy wire mesh.

Emergency spillways shall be installed to safely pass the post–development 100–year 24–hour storm event without overtopping any dam structures.

Baffles should be installed to maintain a Length:Width ratio of at least 10:1.

Inspection and Maintenance:

The side slopes of the pond shall be mowed monthly.

Since decomposing vegetation captured in the pond can release pollutants, especially nutrients, it may be necessary to harvest dead vegetation annually. Otherwise the decaying vegetation can export pollutants out of the pond and also can cause nuisance conditions to occur.

Debris shall be cleared from all inlet and outlet structures monthly.

All eroded or undercut areas shall be repaired as needed.

A sediment marker shall be placed in the forebay to determine when sediment removal is required.

Sediment accumulations in the pond area shall be monitored and sediment shall be removed when the permanent pool volume has been significantly filled and/or the pond becomes eutrophic.